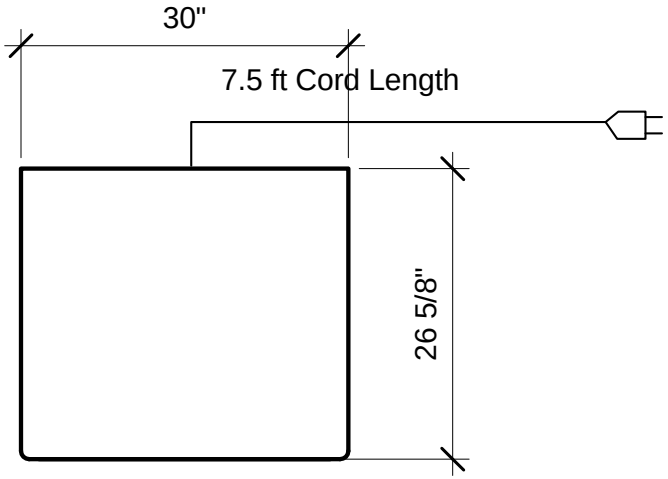

30"W x 26-5/8"D x 24-1/2"H
CUBIC CAPACITY 5.05 CU/FT
SHELVES (1)
120V, 750W, 7.5A
WIFI READY
ENERGY SAVING MODE

NEMA 5-15P
15A - 125V PLUG
HOSPITAL GRADE

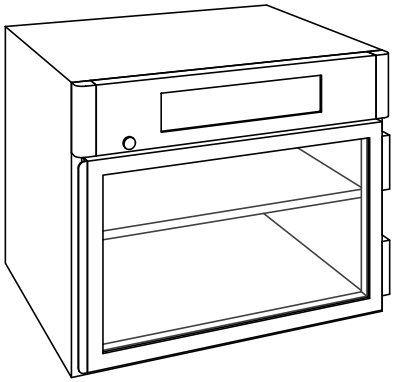

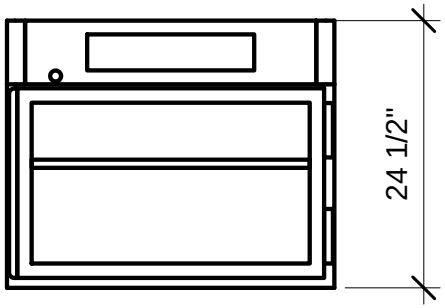

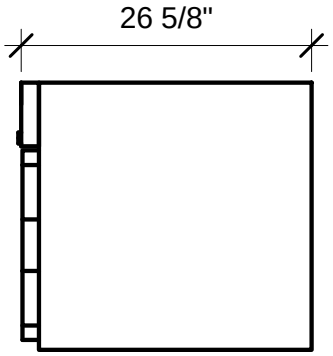

PO#: _____ DATE: _____

APPROVAL: _____

TITLE: _____

BLICKMAN

	NAME	DATE
DRAWN	JG	4-16-12
ENG APPR.		

MATERIAL

FINISH

APPRX WEIGHT = lbs

DO NOT SCALE DRAWING

PROPRIETARY AND CONFIDENTIAL

THE INFORMATION CONTAINED IN THIS DRAWING IS THE SOLE PROPERTY OF BLICKMAN HEALTH INDUSTRIES. ANY REPRODUCTION IN PART OR AS A WHOLE WITHOUT THE WRITTEN PERMISSION OF BLICKMAN HEALTH INDUSTRIES IS PROHIBITED.

UNLESS OTHERWISE SPECIFIED:

DIMENSIONS ARE IN INCHES
BEND RADIUS = MTL. THK.

TOLERANCES:
FRACTION: ± 1/32"
DECIMAL: ± .031"

BLICKMAN HEALTH INDUSTRIES, INC.
LODI, N.J.

TITLE:

7925TG

BLANKET WARMER

SIZE	DWG. NO.	REV
A	14B7925243	

SCALE: 1:16 | SHEET 1 OF 1

5 4 3 2 1