# VS 9 VITAL SIGN MONITOR

## Specifications

### Interfacing

Connectors: Network port
2 USB ports
Multifunctional port

### Battery

Type: Rechargeable lithium ion

Run Time: At least 8 hours when powered by a new, fully-charged battery at 25 °C ±5°C on standard configuration ($SpO_2$ and NIBP), with $SpO_2$ sensor connected, auto NIBP measurements at an interval of 15 minutes, and screen brightness set to factory default.

Recharge Time (power off, or standby): 4 hours to 100%

### Physical Dimensions

Monitor Size (H x W x D): 10.8" x 7.3" x 5.3" max
27.5 cm x 18.5 cm x 13.5 cm max

Monitor Weight: 7.5 lb (3.4 kg) max

### Environmental Conditions

Operating Temperature: 0 to 40 °C (without $CO_2$)
5 to 40 °C (with $CO_2$)

Operating Humidity: 15% to 95%, non-condensing

Barometric: 427.5 to 805.5 mmHg (57 to 107.4 kPa) (without $CO_2$)
430 to 790 mmHg (57.3 to 105.3 kPa) (with $CO_2$)

### Power Requirements

100 to 240 VAC, 0.9 to 0.5 A, 50/60 Hz

### Safety

Type of Protection: Meets the requirements of IEC 60601series




**Top**

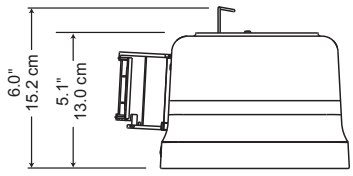


**Front**

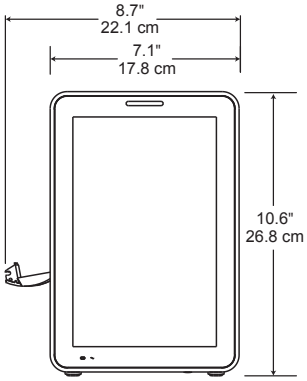


**Side**

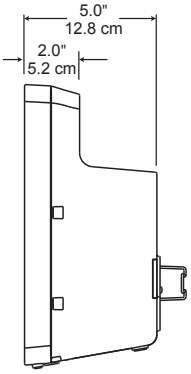


**Top with Smart Temp**

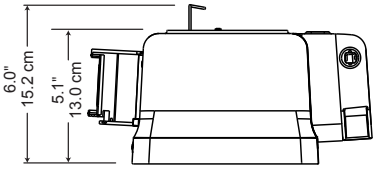


**Front with Smart Temp**

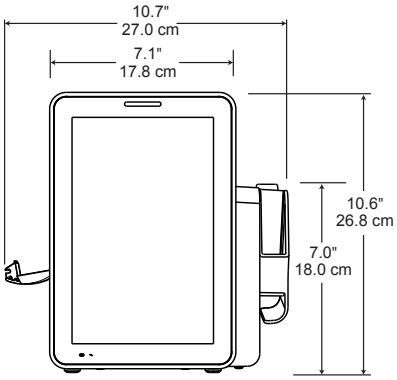


**Side with Smart Temp**

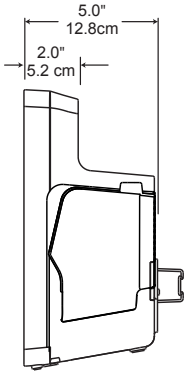


mindray
NORTH AMERICA

# VS 9 VITAL SIGN MONITOR

## Specifications

### Top with Exergen Temperature

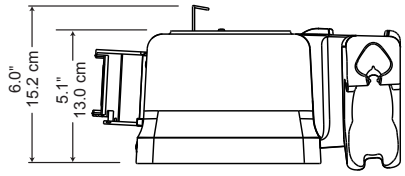


### Front with Exergen Temperature

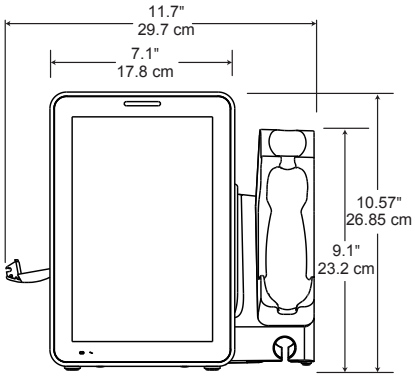


### Side with Exergen Temperature

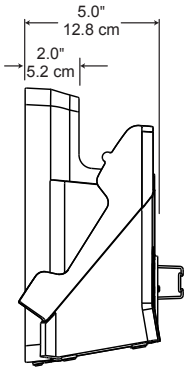


### Mounting Solutions

**Pivot Arm Wall Mount**

Moment Load: 60 lbs (27.2 kg)

Lateral Range of Motion

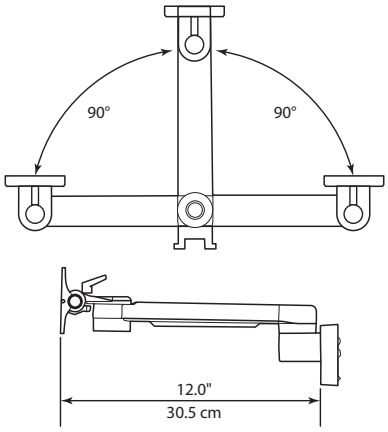


### Rolling Stands

**A**

| | |
|---|---|
| Dimension: | 42.4 "(H) X 20.6"(W) X 19.7"(D)<br>107.6cm(H) X 52.4cm(W) X 51.6cm(D) |
| Moment Load: | 26.5 lbs (12 kg) |
| Max Head Tilt: | 10 degrees |

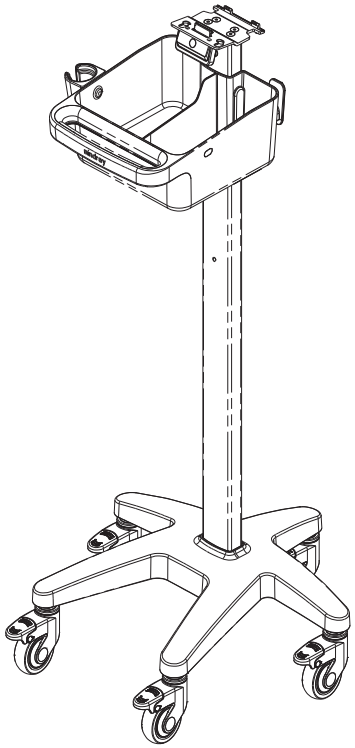

**B**

| | |
|---|---|
| Dimension: | 42.4 "(H) X 20.6"(W) X 19.7"(D)<br>107.6cm(H) X 52.4cm(W) X 50.6cm(D) |
| Moment Load: | 22 lbs (10 kg) |
| Max Head Tilt: | 10 degrees |

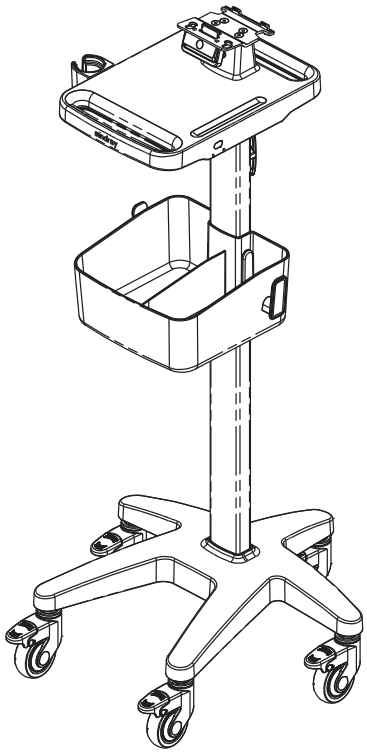

©2022 Mindray DS USA, Inc.
Mindray® is a registered trademark of Shenzhen Mindray Bio-Medical Electronics Co., Ltd.
03/22 P/N: 0002-08-7702 Rev A

mindray NORTH AMERICA