Everest & Jennings
by graham-field



EJ87X-1 Deluxe Transport Chair Operation Manual

EJ87X-1-INS-LAB-RevB18

EJ87X-1 Deluxe Transport Chair user and attendant:
Read this manual before operating the Transport Chair.
Save this manual for future reference.

⚠ **WARNING: EJ87X-1 Deluxe Transport Chair user and attendant: Do not operate the transport chair without first reading and understanding this manual. If you do not understand the warnings, cautions, and instructions provided herein, contact your healthcare professional, GF authorized distributor, or technical representative before proceeding with the use of this product; otherwise personal injury or damage to your transport chair could result.**

CONTENTS

1 INTRODUCTION 3
- INTENDED USE 3
- STATEMENTS OF SIGNIFICANCE 3

2 IMPORTANT SAFETY PRECAUTIONS 4
- EJ87X-1 DELUXE TRANSPORT CHAIR LABELS 4
- WARNINGS 4

3 OPERATION 6
- COMPONENT IDENTIFICATION 6
- OPERATION OF ATTENDANT WHEEL LOCKS 7
- HANDLING TIPS 7
  - TO ATTENDANT 8
  - FOR ATTENDANT: TILTING 9
  - RAMPS AND INCLINES 9
  - CURBS AND STEPS 10

4 ADJUSTMENTS 12
- REAR WHEEL & CASTER 12
- CROSSBRACE 12
- FOOTREST—DETACHABLE, SWINGAWAY 13

5 TRANSPORTING THE EJ87X-1 DELUXE TRANSPORT CHAIR 14
- PREPARING THE EJ87X-1 FOR TRANSPORT 14

6 MAINTENANCE 16

7 TROUBLESHOOTING 19

8 SPECIFICATIONS 20

9 LIMITED WARRANTY 21

10 INDEX 23

1 INTRODUCTION

Thank you for choosing an Everest & Jennings product. We at GF Health Products, Inc. ("Graham-Field") wish to assure you of our continuing commitment to provide innovation and quality in our products. Important safety, operating, and maintenance instructions that warrant the attention of both user and attendant are included in this operation manual. Read the entire manual carefully before operating your new EJ87X-1 Deluxe Transport Chair, keep it handy for future reference, and refer to it as often as necessary to help maintain good performance standards.

Consult your healthcare professional and GF authorized distributor for assistance in developing and learning safe and effective techniques for performing your daily activities according to your individual physical abilities and needs, and to make certain that your Transport Chair is properly prescribed and adjusted for your use.

The safety precautions in this manual are general warnings intended to be used only as basic guidelines. You may find it necessary to develop your own methods for safely solving frequently encountered challenges. Again, consult your professional medical advisors for their recommendations about safety methods, and never hesitate to ask for their assistance.

Your Transport Chair should receive frequent, regularly scheduled maintenance, including an inspection of the mechanical parts, to ensure proper operation. Some suggested inspection procedures, troubleshooting procedures, and adjustment procedures are included in this manual. When it comes to service and repair, remember that your GF authorized distributor knows your Transport Chair best.

The person performing adjustments on the EJ87X-1 Deluxe Transport Chair has the responsibility of making certain that the user can safely operate the Transport Chair with the adjustments selected. This person must evaluate the user's ability, weight, physical condition, the environment in which the Transport Chair will be used, and the terrain over which the Transport Chair will travel.

INTENDED USE

The EJ87X-1 Deluxe Transport Chair is a manual, folding, lightweight Transport Chair, suitable for frequent users with a maximum weight capacity of 300 lb (136 kg) who require a lightweight, portable Transport Chair, fitted to their anatomy, without the need of customization or alteration to the center of gravity. The EJ87X-1 Deluxe Transport Chair is intended for indoor and/or outdoor use.

⚠ **WARNING: The EJ87X-1 Transport Chair is intended to be propelled by an attendant at all times, who should remain behind the Transport Chair when the user is being positioned or the Transport Chair is in use.**

STATEMENTS OF SIGNIFICANCE

Note the following special statements, used throughout this manual, and their significance:

⚠ **WARNING: Indicates a potential hazard situation or unsafe practice that, if not avoided, could result in death or serious injury.**

⚠ **CAUTION: Indicates a potential hazard or unsafe practice that, if not avoided, could result in minor or moderate personal injury.**

▲ **NOTICE: Indicates a potential hazard or unsafe practice that, if not avoided, could result in product or property damage.**

Info: Provides application recommendations or other useful information to ensure that you get the most from your product.

2 IMPORTANT SAFETY PRECAUTIONS

⚠ **IMPORTANT SAFETY PRECAUTIONS: ALWAYS FOLLOW THESE SAFETY PRECAUTIONS WHEN USING YOUR EJ87X-1 DELUXE TRANSPORT CHAIR. FAILURE TO DO SO COULD RESULT IN PERSONAL INJURY TO YOU OR OTHERS OR DAMAGE TO YOUR TRANSPORT CHAIR.**

Safety requires the constant attention of the Transport Chair user and the attendant. It is extremely important to learn and always use safe methods of performing basic daily activities. Always consult your healthcare professional to determine those methods most suitable for your individual abilities.

Protect yourself and your Transport Chair by having your Transport Chair serviced regularly. Whenever any part of your Transport Chair is not functioning properly, contact your GF authorized distributor immediately, as a hazardous situation could result, causing personal injury or damage to your Transport Chair. **ONLY EXCELLENT CONDITION IS ACCEPTABLE WHERE SAFETY IS CONCERNED.** Periodic inspection, adjustment, and replacement of worn parts will provide many years of superb performance.

EJ87X-1 DELUXE TRANSPORT CHAIR LABELS

Read all labels on your EJ87X-1 Deluxe Transport Chair before operating it. Do not remove any of the labels.

⚠ **WARNING: To avoid possible tilt hazard, do not leave user unattended. Attendant must always be behind and in control of Transport Chair when user is being positioned or Transport Chair is in use.**

WARNINGS

⚠ **WARNING: The EJ87X-1 Deluxe Transport Chair maximum weight capacity is 300 lb (136 kg), EVENLY DISTRIBUTED.**

⚠ **WARNING: Do not operate the Transport Chair on streets or roadways.**

⚠ **WARNING: Do not operate the Transport Chair on hilly or rough terrain, sand, wet or icy surfaces, or surfaces with impaired traction. Ensure that pathway is clear of all obstacles.**

⚠ **WARNING: Do not leave the Transport Chair on an incline.**

⚠ **WARNING: Do not turn the Transport Chair while going downhill, as the Transport Chair could tip over.**

⚠ **WARNING: Do not attempt any incline or decline greater than six degrees (10% grade, or one foot of rise or fall per ten feet of ramp length).**

⚠ **WARNING: This Transport Chair does not offer seating or occupant restraint equivalent to the seat provided in a motor vehicle! To increase your safety while traveling in a motor vehicle, always transfer to the vehicle seat and use the restraint provided by the vehicle manufacturer.**

⚠ **WARNING: Do not tie down or attach anything to the wheels. This could cause tipping and possibly result in injury or damage to the Transport Chair.**

⚠ **WARNING: The footplates' lowest point should clear the ground by at least 2 1/2 inches, to permit proper clearance of potential obstruction.**

⚠ **WARNING: Doing a "wheelie" (tilting the Transport Chair backward until it reaches its balance point) is dangerous and could result in personal injury to the user.**

⚠ **WARNING: Do not stand or step on the footplates while transferring to or from your Transport Chair. This could cause the Transport Chair to tip, or could cause personal injury or damage to your Transport Chair.**

⚠ **WARNING: Always engage wheel locks before transferring, using a wheelchair lift or using an elevator.**

⚠ **WARNING: Ensure that Transport Chair is on a stable, level surface and engage wheel locks before and during transfer.**

⚠ **WARNING: Do not lean over the top of the Transport Chair back. This could cause the Transport Chair to tip over.**

⚠ **WARNING: To reduce the risk of tipping before leaning or reaching forward, sit back in the seat and rotate casters fully toward front of Transport Chair.**

⚠ **WARNING: Unauthorized modification or the use of non-Everest & Jennings replacement parts could change the structure of the Transport Chair, void the warranty, and create a hazardous condition resulting in serious personal injury.**

⚠ **WARNING: Do not lean on the Transport Chair or use it as a walker—these are practices which could result in loss of balance and personal injury.**

⚠ **WARNING: Do not use your Transport Chair on stairs or escalators.**

⚠ **WARNING: Use the Transport Chair's positioning belt at all times to maintain proper weight distribution, and ensure that it is properly adjusted.**

⚠ **WARNING: Wheel locks are not brakes. Do not use the wheel locks to slow down the Transport Chair, or while the Transport Chair is moving. Wheel locks are only intended to keep the Transport Chair in place when it is at a complete stop.**

⚠ **WARNING: Cancer and Reproductive Harm - www.p65warnings.ca.gov.**

⚠ **WARNING: GF Health Products, Inc. specifically disclaims responsibility for any personal injury or property damage which may occur during any use which does not comply with federal, state, or local laws or ordinances.**

3 OPERATION

COMPONENT IDENTIFICATION

Familiarize yourself with main components, identified in EJ87X-1 Deluxe Transport Chair illustration below.



OPERATION OF ATTENDANT WHEEL LOCKS

⚠ **WARNING: Wheel locks are not brakes. Do not use the wheel locks to slow down the Transport Chair, or while the Transport Chair is moving. Wheel locks are only intended to keep the Transport Chair in place when it is at a complete stop.**

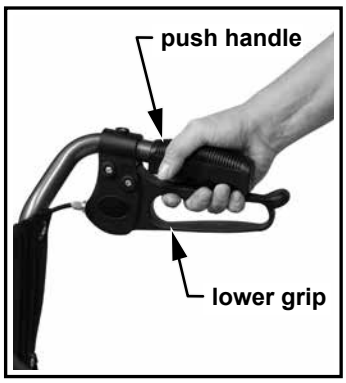

attendant wheel lock, temporary lock

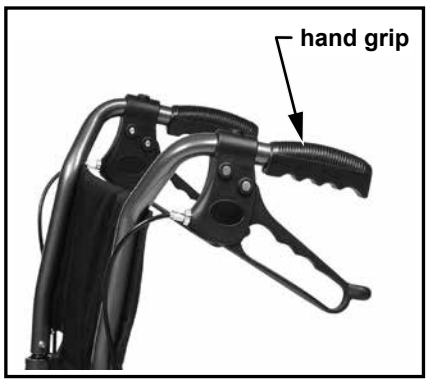

attendant wheel lock, indefinite lock

For attendant: attendant wheel locks, temporary lock

The attendant wheel locks can be engaged temporarily:

1. To engage attendant wheel locks, squeeze the lower grip upward toward the push handle / hand grip as shown at above left; the rear wheels will be locked in place as long as you hold the lower grip as shown at far right.
2. To release attendant wheel locks, let go of the lower grip; the rear wheels will be free to move.

For attendant: attendant wheel locks, indefinite lock (for transfer or stationary periods)

1. To engage attendant wheel locks indefinitely, push the lower grip down, away from the push handle / hand grip, until it locks into place, as shown at above right. The rear wheels will be locked in place.
2. To release attendant wheel locks, pull the lower grip upward toward the push handle until the rear wheels move freely.

⚠ **WARNING: Ensure that wheel locks lock in place appropriately before occupying or operating Transport Chair. If your wheel locks are not operating correctly, see your GF authorized distributor for repair.**

HANDLING TIPS

The Everest & Jennings EJ87X-1 Deluxe Transport Chair has been designed and engineered to perform as a stable and well balanced unit when used for its intended purpose. However, it is possible to tip the Transport Chair over if it is used improperly. We urge both user and attendant to learn the handling characteristics of your Transport Chair. It is most important to learn safe methods to perform the daily activities basic to your lifestyle. Use this manual as a guide for developing techniques that you are comfortable with, and consult your medical professionals for assistance in developing the skills and proper techniques to perform all activities safely.

TO ATTENDANT

⚠ **WARNING: To avoid possible tilt hazard, do not leave user unattended. Attendant must always be behind and in control of Transport Chair when user is being positioned or Transport Chair is in use.**

1. Work with your medical professionals to learn the best methods of assistance.
2. Always tell the Transport Chair user what you are about to do and what you expect them to do, especially when changing balance or tipping backward. Remind the Transport Chair user to lean back when tipping backward, to maintain proper weight distribution.
3. When assisting a Transport Chair user, always perform operations carefully and use good body mechanics (bend your knees slightly and keep your back as upright as possible) to prevent personal injury.

⚠ **WARNING: Ensure hand grips are firmly attached to push handles before assisting user with Transport Chair. Slippage of hand grips could cause personal injury or Transport Chair damage. If hand grips are loose or in unstable condition, contact your GF authorized distributor for repair before assisting user with Transport Chair.**

⚠ **WARNING: Do not lift the Transport Chair by any detachable parts; this could cause personal injury to attendant or user, and damage to the Transport Chair. Use the carrying straps to lift the unoccupied Transport Chair.**

Balance

Proper balance is the key to maintaining the stability of your EJ87X-1 Deluxe Transport Chair. Reaching, bending, and transferring to or from a Transport Chair will change your weight distribution and center of gravity. Have an attendant with you at all times, especially when reaching, bending, or transferring. Use the Transport Chair's positioning belt at all times to maintain proper weight distribution, and ensure that the positioning belt is properly adjusted.

Transfer Activities

⚠ **WARNING: Always ensure that the Transport Chair is on a stable, level surface and engage the wheel locks before transfer.**

⚠ **WARNING: Do not step on the footplates; this could cause the Transport Chair to tip. Fold them up, and either detach them or swing them aside.**

⚠ **WARNING: There is a critical moment when there is little or no seat platform beneath you. Take every precaution to reduce this unsupported distance before you attempt transfer.**

Transferring into or out of a Transport Chair is a very difficult maneuver; exercise extreme care when transferring, and never transfer without the aid of an attendant. Consult your physician, nurse, or physical therapist for assistance in developing your individual technique. Make sure that the Transport Chair is stabilized, and will not move or slide during the transfer. Take extra precaution to prevent tipping. Use good body mechanics to prevent personal injury.

FOR ATTENDANT: TILTING

Tilting the Transport Chair backward is generally required to negotiate such obstacles as ramps, inclines, curbs, stairs and door sills. Tilting should only be performed by an attendant. To tilt the Transport Chair backward:

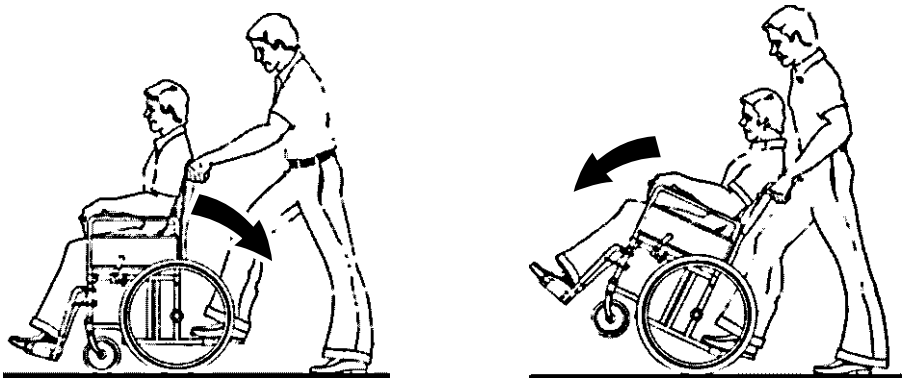

1. Grasp the push handles securely and ensure the hand grips are firmly attached.
2. Ensure the user's feet are situated flat on the footplates and that arms, hands and fingers are clear of the wheels and any other components.
3. Advise the user, before tilting the Transport Chair backward, what you intend to do and remind the user to lean back.
4. Place one foot on the tipping lever and apply downward force until the Transport Chair is tilted back enough to overcome the obstacle.
5. Lower the front end slowly.

RAMPS AND INCLINES

⚠ WARNING: During descent, the footplates' lowest point should be no closer to the ground than 2 1/2 inches to permit proper clearance.

⚠ WARNING: Do not attempt any incline or decline of more than 6 degrees (10% grade, or one foot of rise or fall per ten feet of ramp length).

⚠ WARNING: Do not use wheel locks to slow your descent. Attempting to use wheel locks is likely to result in accidental locking that could cause the Transport Chair to stop abruptly, suddenly pitch forward, or tip sideways.

⚠ WARNING: Avoid changing direction while descending a ramp or incline, as this could cause instability.

Ramps and inclines should only be negotiated with the assistance of an attendant. To attendant: Practice with a healthcare professional first before attempting ramps or inclines. Always inspect the ramp for hazards such as holes, slippery or uneven surfaces, etc. before starting up or down. If you cannot see the entire ramp, ask someone to inspect it for you.

CURBS AND STEPS

⚠ **WARNING: Never attempt to negotiate curbs or steps in your Transport Chair without the assistance of an attendant.**

⚠ **WARNING: Never attempt to negotiate stairs or escalators in your Transport Chair under any circumstances.**

Curbs, steps and stairways are dangerous obstacles that may confront the Transport Chair user. When you encounter curbs, find a way around, or use the ramps now available in most locations. If you encounter stairs or escalators and there is no ramp available, avoid the stairs or escalators by utilizing the disabled designated elevators now required in most locations.

Curbs and steps should only be negotiated with the assistance of an attendant. The following are suggestions only for curb negotiation. It is important for you to develop your own safe technique that is best suited to your abilities.

For attendant: curb ascent facing forward



1. Ensure the hand grips are securely fastened and do not turn or slip.
2. Stand behind the Transport Chair, holding the hand grips, facing the curb.
3. Advise the user that you will be tilting backward and remind the user to lean back.
4. Tilt the Transport Chair backward to its balance point and move forward until the front casters pass over the top of the curb.
5. Lower the front casters SLOWLY to the curb while you rotate the Transport Chair forward by the push handles until the rear wheels roll up and over the curb.
6. Ensure that the Transport Chair has completely cleared the curb and can not roll backward.

For attendant: curb ascent facing backward

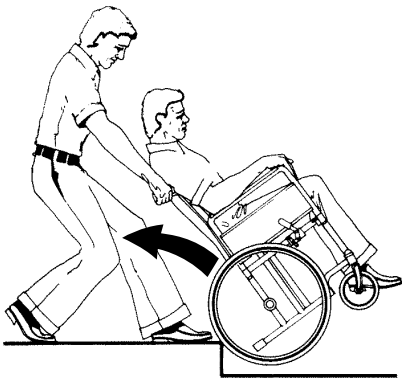

1. Ensure the hand grips are securely fastened and do not turn or slip.
2. Stand behind the Transport Chair, holding the hand grips, facing away from the curb, with the rear wheels against the curb.
3. Advise the user that you will be tilting backward and remind the user to lean back.
4. Tilt the Transport Chair backward to its balance point and lift up by the push handles while pulling the Transport Chair up and over the curb. DO NOT lower the front casters downward until the Transport Chair is back far enough to clear the curb.

For attendant: curb descent

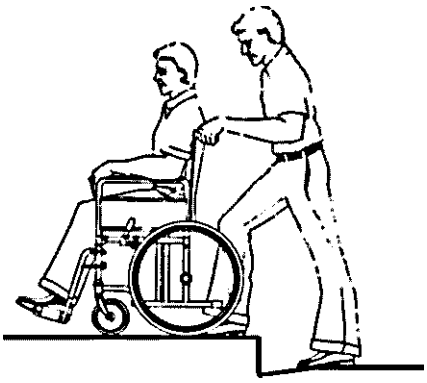

1. Ensure the hand grips are securely fastened and do not turn or slip.
2. Stand behind the Transport Chair, holding the hand grips, with your back to the curb.
3. Look over your shoulder and step down carefully.
4. Hold the hand grips tightly and pull the Transport Chair until the rear wheels reach the curb edge.
5. Slowly roll the rear wheels down onto the lower level.
6. After the wheels are safely on the lower level, advise the user that you will be tilting backward and remind the user to lean back.
7. Tilt the Transport Chair backward to its balance point; this will lift the front casters off the curb. Take several small steps backward until the front casters have cleared the curb.
8. Turn the Transport Chair around, place one foot on the tipping lever, and gradually lower the front casters to the ground.

4 ADJUSTMENTS

The EJ87X-1 Deluxe Transport Chair offers several adjustments to make it easier and more comfortable to operate. Section 7, MAINTENANCE, offers preventive maintenance suggestions for keeping your Transport Chair in excellent condition; ensure that all components are in excellent condition before adjusting. The following are recommended methods; after a few adjustments, you may develop your own. Always consult your GF authorized distributor for assistance.

The person performing adjustments on the Transport Chair has the responsibility of making certain that the user and attendant can safely operate the Transport Chair with the adjustments selected. This person must evaluate the user's ability, weight, physical condition, the environment in which the Transport Chair will be used, and the terrain over which the Transport Chair will travel.

All adjustments and their page locations are referenced in the index at the end of this manual. Specific tools needed to perform each adjustment are identified in adjustment directions. Most of the following adjustments can be performed with the wrench and hex key included with your EJ87X-1 Deluxe Transport Chair.

REAR WHEEL & CASTER

We recommend that you do not replace or adjust rear wheel or caster components yourself, since special tools and training are required. Contact your GF authorized distributor when your rear wheels or casters need adjustment.

CROSSBRACE

Tighten crossbraces

Tools required: included wrench and hex key

Check the crossbraces to ensure that the bolts and nuts that fasten the crossbraces in the center of the Transport Chair are secure (crossbraces should be loose enough to fold easily, yet snug enough to take up excess play). Use the included tools to tighten the crossbraces.

FOOTREST—DETACHABLE, SWINGAWAY

⚠ **WARNING: Do not stand on the footplates; this could cause the Transport Chair to tip.**

Remove footrest for transfer (see picture at right)

1. Pull swingaway release lever toward front of Transport Chair and swing footrest outward.
2. Lift footrest straight up off Transport Chair hinge pins.

Attach footrest (see picture at right)

1. Set footrest on outside of Transport Chair so that footrest hinge plates engage Transport Chair hinge pins.
2. Swing footrest inward until release lever locks into place. Ensure that swingaway release lever is locked in place.

⚠ **WARNING: Ensure that footrests are locked in place before occupying or operating Transport Chair.**

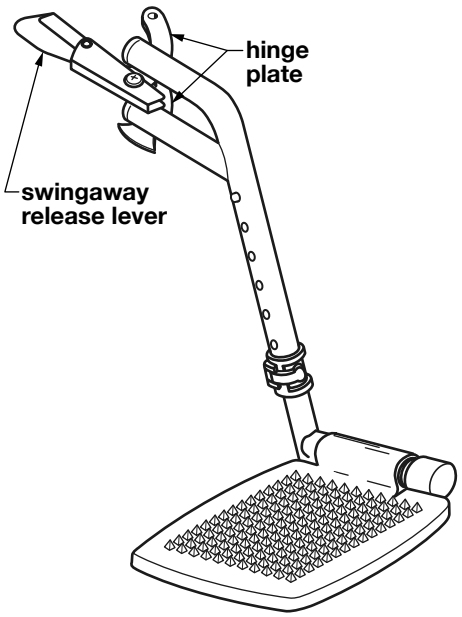

remove footrest (left shown)

Adjust footplate extension length (see picture at right)

1. Loosen latch to free footplate extension inside hanger.
2. Press down on the locking buttons and adjust the footplate to the desired length. Ensure that the locking buttons are completely extended and securely fastened in the adjustment holes.
3. Fasten latch to secure footplate extension inside hanger.
4. Repeat steps 1-3 for the other footplate extension.
5. Ensure that both footplate extensions are securely fastened and that minimum ground clearance is 2 1/2 inches.

⚠ **WARNING: The footplates' lowest point should be no closer to the ground than 2 1/2 inches, to permit proper clearance.**

⚠ **WARNING: Ensure that footplates are securely clamped before occupying or operating Transport Chair.**

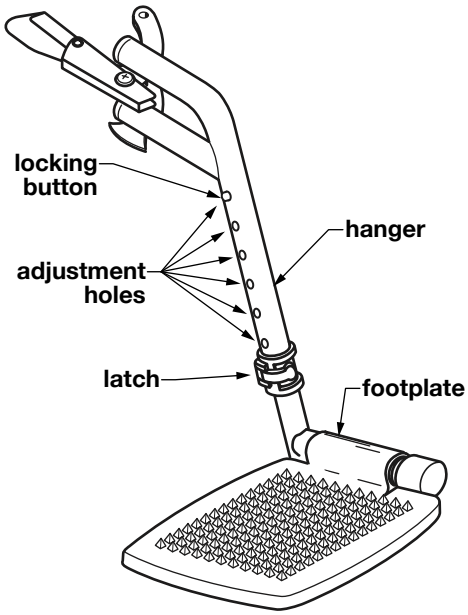

footplate extension, adjust length

5 TRANSPORTING THE EJ87X-1 DELUXE TRANSPORT CHAIR

PREPARING THE EJ87X-1 FOR TRANSPORT

⚠ **WARNING: This Transport Chair does not offer seating or occupant restraint equivalent to the seat provided in a motor vehicle! To increase your safety while traveling in a motor vehicle, always transfer to the vehicle seat and use the restraint provided by the vehicle manufacturer.**

When transporting the Transport Chair in a motor vehicle, do not place the Transport Chair where it will interfere with the safe operation of the vehicle or endanger the driver or passengers. The front seat is not a good location to store a Transport Chair during transport, as the Transport Chair can be dislodged and become a serious hazard to the vehicle driver. Always take precautions to avoid personal injury when loading or lifting a Transport Chair into or out of a vehicle. The Transport Chair can easily be transported in the rear seat or the trunk.



Transport Chair shown unfolded

Transport Chair shown folded

Fold the Transport Chair (see picture above)

1. Swing back or detach footrests from Transport Chair.
2. Fold the back: Press both upper back release levers toward the upper back until the back releases, then lower the upper back.
3. Fold the Transport Chair: Pull up sharply on the seat upholstery at front and rear center at the same time. Tip the Transport Chair sideways so the opposite wheel doesn't drag. Press the sides together.

Store Transport Chair in car's back seat

1. Move the car's front seat as far forward as possible.
2. Holding the folded Transport Chair by the carrying straps, lift it into the car and place it on the back seat floorboard. Stow the footrests alongside. DO NOT put any articles on top of the Transport Chair.

Ensure the Transport Chair is stable, will not shift while the car is in motion, and does not block the driver's field of vision.

Store Transport Chair in car's trunk

1. Holding the folded Transport Chair by the carrying straps, lift it and carefully place it in the trunk. If the footrests have been removed, stow them alongside.
2. DO NOT put any articles on top of the Transport Chair. Close the trunk lid slowly.

Unfold the Transport Chair (see picture on previous page)

1. Push down on the seat rails to open.

⚠ **WARNING: DO NOT place your hand or fingers between seat rails and side panels.**

2. Push down again on the seat rails until the seat is completely open.
3. Unfold the back: Raise the upper back until it locks into place; ensure that upper back is locked into place before proceeding.
4. If footrests have been removed, install them.

⚠ **WARNING: Ensure that Transport Chair is unfolded as instructed and that upper back is locked into place, seat is completely open, and footrests are locked in place before occupying or operating Transport Chair.**

6 MAINTENANCE

Protect your E&J EJ87X-1 Deluxe Transport Chair by having it serviced regularly. Proper care and maintenance are essential to keep your Transport Chair in safe working condition. Periodic inspection, adjustment, and replacement of worn parts will provide many years of superb performance. When you believe that a component or part of your Transport Chair is not functioning properly, contact your GF authorized distributor immediately, as a potentially hazardous condition could result. Only excellent condition is acceptable where safety is concerned.

Service manual

There is no service manual for the Transport Chair. Contact your GF authorized distributor with service questions not answered by this manual.

Info: We recommend that you have a GF authorized distributor perform a six month maintenance check, as the distributor may find and correct a problem which might otherwise go undetected and eventually cause more serious problems and/or personal injury.

Do-it-yourself maintenance

You can do many of the scheduled maintenance tasks yourself, if you have mechanical ability and a few basic tools. Refer to the maintenance schedule below for the recommended regularity of each procedure. If any maintenance procedure is not clear to you, ask your GF authorized distributor for assistance.

▲ **NOTICE: Improper maintenance can cause operating problems and may affect your warranty.**

⚠ **WARNING: Unauthorized modification or the use of non-Everest & Jennings replacement parts could change the structure of the Transport Chair, void the warranty, and create a hazardous condition resulting in serious personal injury.**

MAINTENANCE SCHEDULE				
Procedure	Perform at least every			
	Week	Month	3 Months	6 Months
Check tire wear	✔			
Check wheel lock engagement	✔			
Wipe off frame with soft cloth	✔			
Check handgrips		✔		
Check upholstery		✔		
Check rear wheel adjustment		✔		
Check arms		✔		
Check backposts / push handles		✔		
Check footrests		✔		
Clean frame with soap and water			✔	
Check caster stem rotation			✔	
GF distributor maintenance check				✔
Check rear wheel bearings (distributor)				✔
Check caster bearings (distributor)				✔

List of tools

The tools and cleaning supplies listed will assist in the procedures outlined in this section.

30 weight oil (available at most auto parts stores)
Phillips screwdriver
soft cloth
mild soap and water solution

General care

Always evaluate the overall operation of your Transport Chair. It should function with ease and should travel straight without excessive drag or pull to one side.

Remember, your GF authorized distributor knows your Transport Chair best when it comes to service and repairs. Contact your distributor with any questions or concerns regarding the safe operation and maintenance of your Transport Chair. Regular maintenance is essential for your safety and continued operation of your Transport Chair.

Check tire wear

Examine tires at least once a week for surface wear and cracks and replace them as needed. Always replace tires when they become loose on the rims or cracks appear.

Check wheel lock engagement

Check wheel lock engagement at least once a week. If a wheel lock is worn or damaged, have your GF authorized distributor replace it immediately. Inspect the hardware for looseness or signs of wear.

Ensure the locking mechanism operates smoothly. The locking assembly should be tight enough so that the wheel can not rotate or the lock slip. Check that the locking shoe does not press against the tire when in the unlocked position. Excessive force should not be required to either engage or release wheel locks. Oil the wheel lock pivot points with one or two drops of 30 weight oil. Remove excess oil and dirt.

Check hand grips

Check hand grips at least once a week. Ensure that they are not ripped. Ensure that they are tight and securely fastened.

Check upholstery and carrying straps

Check upholstery and carrying straps at least once a month. Inspect for rips, tears and worn spots. Ensure that all upholstery and carrying-strap-attaching screws are present, properly aligned, and well-secured. Use a Phillips screwdriver to tighten mounting screws. Check attaching screws for sharp edges or stripped screws, and replace if found.

⚠ **WARNING: Worn or torn upholstery, or upholstery with loose hardware, must be replaced immediately. It may not support body weight.**

Check rear wheel adjustment

Inspect the wheels at least once a month. Check alignment by elevating the rear of the Transport Chair on a stable object until the rear wheels clear the ground, or placing the Transport Chair upside down in a stable position such that the wheels can spin freely. Spin the wheels; there should be no wobble or sideplay, and the wheels should spin freely without binding. The bearings should be clean and rotate smoothly. If there is a problem, contact your GF authorized distributor. If adjustment is required, this should be done by your GF authorized distributor only.

Check arms

Check arms at least once a month. Inspect for sharp edges or cracks which could weaken the arm, and replace if found. Ensure that all attaching screws are present and tight. Use a Phillips screwdriver to tighten arm pad mounting screws. Check for burrs on the screw heads and replace if found. Ensure that screws do not extend into the padding.

Check backposts / push handles

Check backposts at least once a month. Ensure that all mounting hardware is securely fastened and that the backposts are not bent or damaged. Ensure that back folding mechanisms are secure, work correctly, and that there is no play in back fold points. Contact your GF authorized distributor if you observe back play, cracking or peeling paint or plating.

Check footrests

Check footrests at least once a month. Inspect the locking mechanisms to confirm sure fit. Check for cracks, burrs, or sharp edges, and replace if found. Ensure that the footrest will automatically lock securely in place and will not accidentally unlock.

Cleaning your Transport Chair

Wipe off base and seat frame frequently, at least once a week, using a soft cloth. Dry the Transport Chair immediately if exposed to moisture. Clean the frame every three months with a mild soap and water solution. The frame does not need to be waxed. Do not use solvents, abrasive waxes, caustic chemicals or spray silicone. Never use abrasive cleansers; they could scratch the finish. Never use steam or high pressure cleaners. Clean upholstery and plastic components at least once a month with a mild soap and water solution.

Check casters

Check the caster stems for proper rotation at least every three months. The caster fork must swivel freely to facilitate steering and handling. Adjusting the stem nut varies the amount of force required to turn the caster. If the nut is too loose, the caster will flutter or shimmy; if the nut is too tight, the Transport Chair will be difficult to steer. If the caster stem requires adjustment, or the stem bearings require replacement, contact your GF authorized distributor. Ensure that stems are firmly attached to forks, and that forks and stems are not bent. Evaluate all threads, locking nuts and bearings.

Check wheel bearings

Have your GF authorized distributor check caster and rear wheel axle bearings at least every six months.

7 TROUBLESHOOTING

Continual use of your Transport Chair necessitates maintenance, especially if the factory-set adjustments have been altered. The following troubleshooting guide lists several common problems that may occur, and offers corrective actions for each. If you are unsure of the solution or unable to diagnose the problem, do not hesitate to ask your GF authorized distributor for assistance.

SYMPTOM						PROBABLE CAUSE AND CORRECTIVE ACTION
looseness in wheelchair	squeaks / rattles	caster flutter	sluggish turning	chair veers left	chair veers right	
✓	✓	✓	✓			Nuts and / or bolts may be loose. If so, tighten. Bolts should be snug.
		✓	✓	✓	✓	Rear wheels and / or casters may be adjusted improperly. Ensure that both rear wheels are mounted in identical positions, and that casters are mounted in identical positions.
		✓	✓	✓	✓	Caster stem(s) may be adjusted improperly. See distributor to correct adjustment.

Info: Use only Everest & Jennings replacement parts. Contact your GF authorized distributor to order replacement parts.

⚠ **CAUTION: A complete inspection of your Transport Chair, including maintenance, servicing and safety checks, should be performed by a GF authorized distributor at least every six months.**

⚠ **WARNING: Unauthorized modification or the use of non-Everest & Jennings replacement parts could change the structure of the Transport Chair, void the warranty, and create a hazardous condition, which could result in serious personal injury.**

8 SPECIFICATIONS

The Everest & Jennings EJ87X-1 Deluxe Transport Chair has the following parameters:

Seat width	**19" (48.3 cm)**
Seat depth	**16" (40.6 cm)**
Seat to floor height	**18" (45.7 cm)**
Back height	**18" (45.7 cm)**
Overall length	**32" (81.3 cm) not including footrests**
Overall height	**38" (96.5 cm)**
Overall width	**23" (58.4 cm)**
Width folded	**10" (25.4 cm)**
Weight	**21.38 lb (9.70 kg) not including footrests**
Caster wheels	**8" x 1" black plastic**
Rear wheels	**Black wheel with black 12" x 2 1/4" polyurethane tire**
Maximum weight capacity	**300 lb (136 kg), EVENLY DISTRIBUTED**
Info: all dimensions ±1/4 inch (.5 cm)	

9 LIMITED WARRANTY

SCOPE OF WARRANTY

GF Health Products, Inc. (“GF”) warrants to the original purchaser only that it will replace or repair components, at GF’s sole discretion, that are defective in material or workmanship under normal use and service. All warranties are conditioned upon the proper use of the products strictly in accordance with good commercial practice and applicable GF instructions and manuals, including proper use and maintenance. To the extent that a component is warranted by a third party, GF conveys all of its rights under that warranty to the original purchaser, to the extent permitted.

This limited warranty shall only apply to defects that are reported to GF’s customer service team within the applicable warranty period and which, upon examination by GF or its authorized representative, prove to be a warranty item. This limited warranty is not transferable.

The warranted components and time period are set forth below:

Sideframes and crossbraces: ..... one year
All other durable components not listed above: ..... six months

The applicable warranty period shall commence from date of shipment to the original customer, unless there is an expiration date on the component in which case the warranty shall expire on the earlier of warranty period or the expiration date.

OBTAINING WARRANTY SERVICE

This limited warranty shall only apply to defects that are reported to the Distributor from whom the Customer purchased the product within the applicable warranty period. If there is not a Distributor, you must contact GF directly by calling 1.770.368.4700, sending a fax request to 1.770.368.2386, or by e-mailing a request to cs@grahamfield.com. Specific directions will be provided by the Customer Service Representative. Failure to abide by the specific directions will result in denial of the warranty claim.

EXCLUSIONS

The warranty does not cover and GF shall not be liable for the following:

1) Defects, damage, or other conditions caused, in whole or in part, by misuse, abuse, negligence, alteration, accident, freight damage, tampering or failure to seek and obtain repair or replacement in a timely manner;
2) Products which are not installed, used, or properly cleaned and maintained as required in the official manual for the applicable product;
3) Products considered to be of a non-durable nature including, but not limited to: casters, filters, fuses, gaskets, lubricants, and charts;
4) Accessories or parts not provided by GF;
5) Charges by anyone for adjustments, repairs, replacement parts, installation or other work performed upon or in connection with such products which are not expressly authorized in writing, in advance, by GF;
6) Any labor or shipping charges incurred in the replacement part installation or repair;
7) Costs and expenses of regular maintenance and cleaning; and
8) Representations and warranties made by any person or entity other than GF.

ENTIRE WARRANTY, EXCLUSIVE REMEDY AND CONSEQUENTIAL DAMAGES DISCLAIMER

THIS WARRANTY IS GF'S ONLY WARRANTY AND IS IN LIEU OF ALL OTHER WARRANTIES, EXPRESS OR IMPLIED. GF MAKES NO IMPLIED WARRANTIES OF ANY KIND INCLUDING ANY IMPLIED WARRANTIES OF MERCHANTABILITY OR FITNESS FOR A PARTICULAR PURPOSE.

IF ANY MODEL OR SAMPLE WAS SHOWN TO THE CUSTOMER, SUCH MODEL OR SAMPLE WAS USED MERELY TO ILLUSTRATE THE GENERAL TYPE AND QUALITY OF THE PRODUCT AND NOT TO REPRESENT THAT THE PRODUCT WOULD NECESSARILY CONFORM TO THE MODEL OR SAMPLE IN ALL RESPECTS.

THIS WARRANTY IS LIMITED TO THE REPAIR OR REPLACEMENT OF THE DEFECTIVE PARTS. GF SHALL NOT BE LIABLE FOR AND HEREBY DISCLAIMS ANY DIRECT, SPECIAL, INDIRECT, INCIDENTAL, EXEMPLARY OR CONSEQUENTIAL DAMAGES, INCLUDING, BUT NOT LIMITED TO: DAMAGES FOR LOSS OF PROFITS OR INCOME, LOSS OF USE, DOWNTIME, COVER, OR EMPLOYEE OR INDEPENDENT CONTRACTOR WAGES, PAYMENTS AND BENEFITS.

The warranties contained herein contain all the representations and warranties with respect to the subject matter of this document, and supersede all prior negotiations, agreements and understandings with respect thereto. The recipient of this document hereby acknowledges and represents that it has not relied on any representation, assertion, guarantee, warranty, collateral contract or other assurance, except those set out in this document.

For additional information on this product or this warranty, contact a GF Customer Service Representative.

NOTES:

1) Additional terms and conditions may apply.
2) Freight claims must be notated on the appropriate shipping documents and must be made with immediacy. International, federal and state regulations govern specific requirements for freight claims. Failure to abide by those regulations may result in a denial of the freight claim. GF will assist you in filing the freight claim.
3) Claims for any short shipment must be made within three (3) days of the invoice date.

10 INDEX

A

Adjustments 12
Arms, check 18
Attendant wheel locks, adjust 7

B

Backposts, check 18
Balance 8

C

Casters, adjust 12
Caster stems, check 18
CAUTION statement, significance 3
Cleaning your Transport Chair 18
Component identification 6
Crossbraces, adjust 12
Curb ascent facing backward (for attendant) 10
Curb ascent facing forward (for attendant) 10
Curb descent (for attendant) 11
Curbs and steps, negotiating 10

E

EJ87X-1 Deluxe Transport Chair, illustration 6
EJ87X-1 maximum weight capacity 4

F

Footplate extension length, adjust 13
Footrest, adjustment 13
Footrest, attach 13
Footrest, remove 13
Footrests, check 18

H

Hand grips, check 17
Handling tips, to attendant 8

I

Info statement, significance 3
Introduction 3

L

Limited warranty 21

M

Maintenance 16

N

NOTICE statement, significance 3

R

Ramps and Inclines 9
Rear wheel adjustment, check 18
Rear wheels, adjust 12

S

Safety precautions 4
Specifications 20

T

Tires, check 17
Tools, for maintenance, list 17
Transfer activities 8
Transporting the EJ87X-1 Deluxe Transport Chair 14
Troubleshooting 19

U

Upholstery, check 17

W

Warnings 4
WARNING statement, significance 3
Warranty, limited 21
Wheel bearings, check 18



© 2017, GF Health Products, Inc. All Rights Reserved.
E&J, Everest & Jennings, and Graham-Field
are trademarks of GF Health Products, Inc.,

GF Health Products, Inc. is an ISO 13485 Certified Company.

Manufactured for GF Health Products, Inc.
Made in China