Traveler® L3 Plus

Everest & Jennings®

PARTS CATALOG

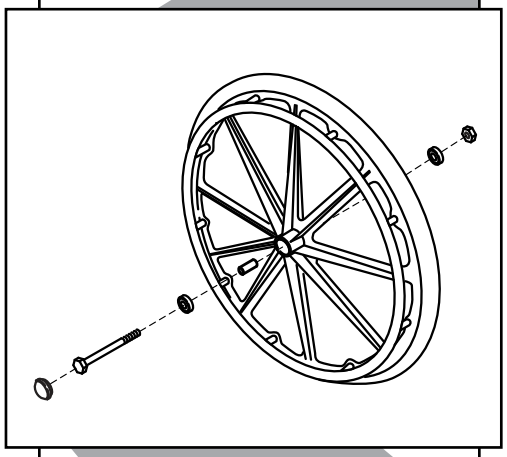

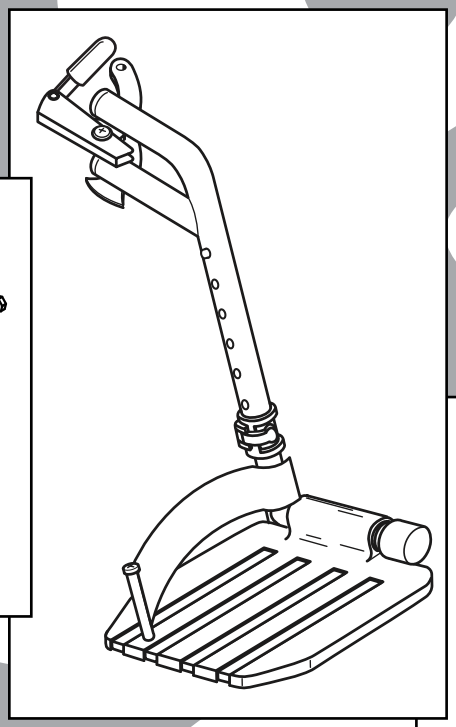

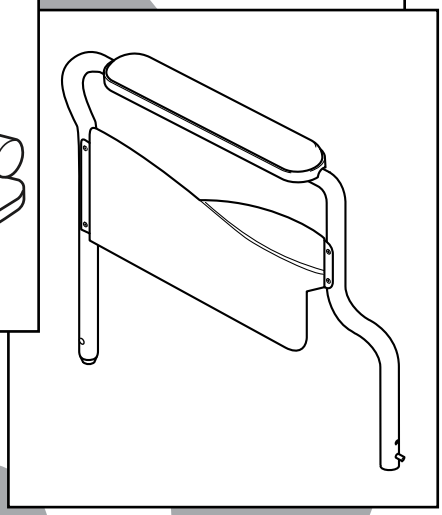

Everest & Jennings®
by graham-field

CONTENTS

SIDEFRAME AND CROSSBRACE 3

ARM: FLIP-BACK FIXED-HEIGHT 4

ARM: FLIP-BACK ADJUSTABLE-HEIGHT 4

REAR WHEEL 5

CASTER 5

FOOTREST, SWINGAWAY AND DETACHABLE 6

ELEVATING LEGREST, SWINGAWAY AND DETACHABLE 6

UPHOLSTERY 7

ACCESSORIES 7

SIDEFRAME AND CROSSBRACE

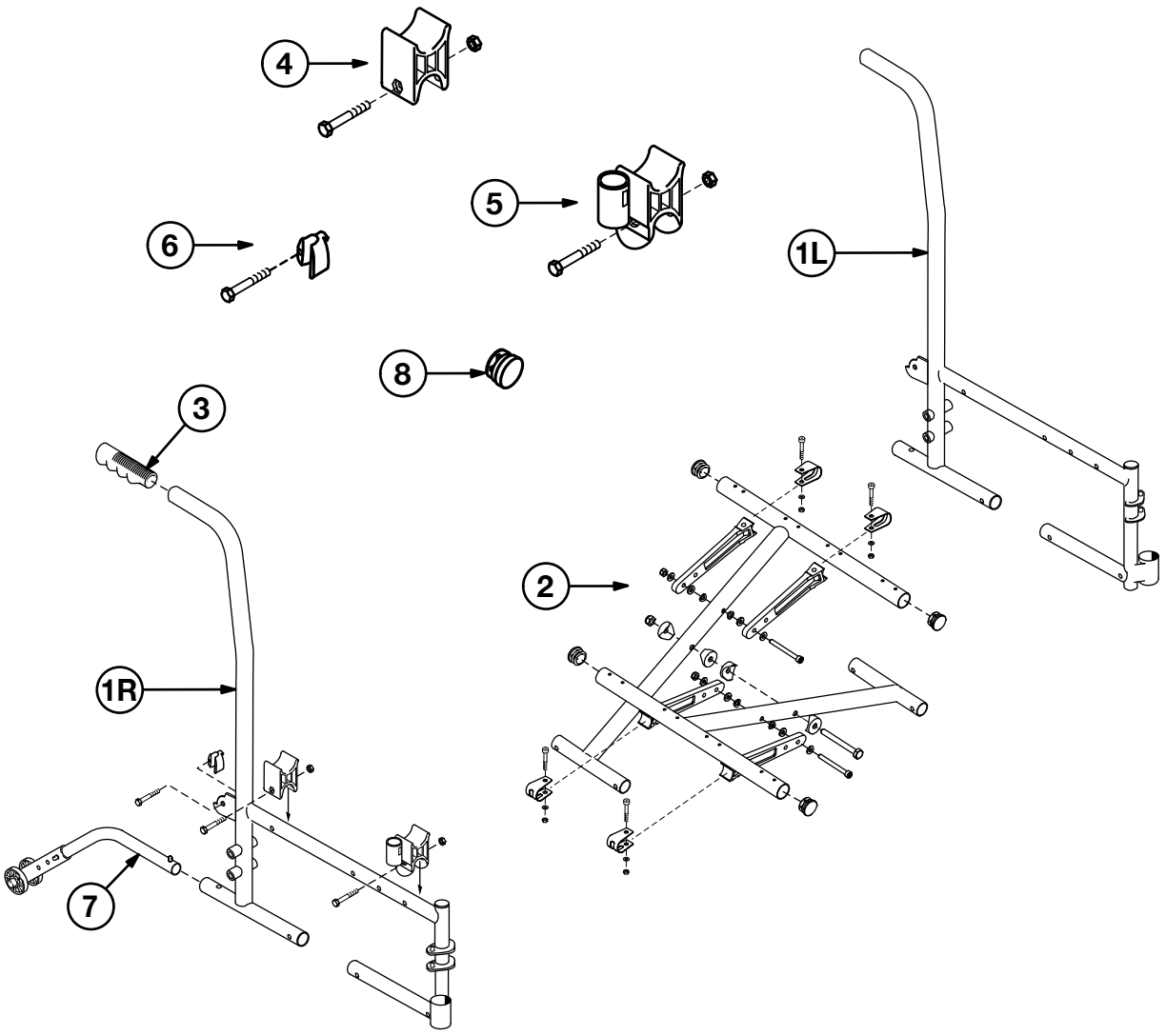

1 Sideframe and backpost, all widths

16" deep Right..... 90763201A
16" deep Left 90763202A

2 Crossbrace, pair (Includes center bolt and nut, 4 crossbrace links, 4 plugs and mounting hardware)

16" W x 16" deep..... 907632C1A
18" W x 16" deep..... 907632C2A
20" W x 16" deep..... 907632C3A

3 Grip (10 each) 90763005A

4 Rear seat rail cradle, pair (includes 2 each and mounting hardware) 90763206A

5 Front seat rail and arm cradle, pair (includes 2 each and mounting hardware) 90763208A

6 Arm bracket, pair (includes 2 each and mounting hardware) 90763210A

7 Anti-Tippers, pair

for 18" to 20" seat height..... 90763230A
for 16.3" or 17.9" seat height 90763233A

8 Seat rail plug (4 each) 907633CSE

ARM: FLIP-BACK FIXED-HEIGHT

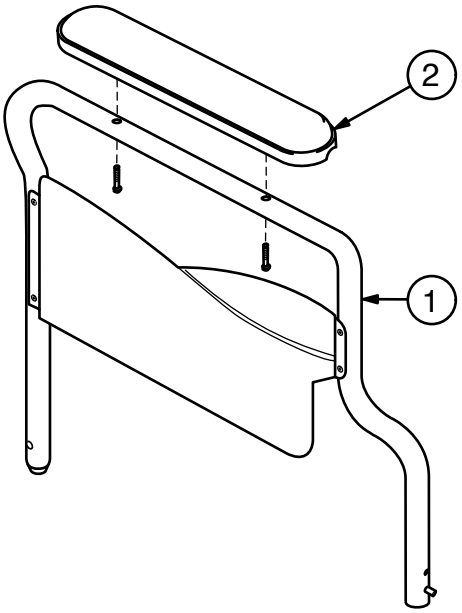

1	Arm, flip-back fixed-height, pair (includes right and left arm with mounting hardware, side panel, latch, and arm pad)	
	Desk length (shown)	90763231A
	Full length	90763232A
2	Arm pad only, pair (includes two black arm pads and mounting screws)	
	Desk length (shown)	90763022A
	Full length	90763023A

ARM: FLIP-BACK ADJUSTABLE-HEIGHT

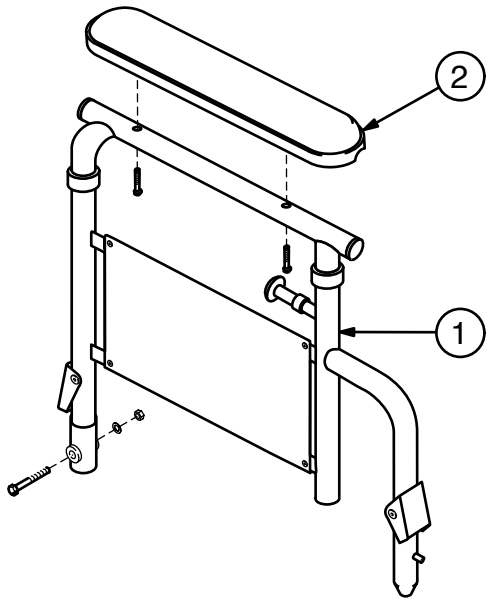

1	Arm, flip-back adjustable-height, desk length, pair (includes right and left arm with mounting hardware, side panel, latch, and arm pad)	90763227
2	Arm pad only, desk length, pair (includes two black arm pads and mounting screws)	90763022A

REAR WHEEL

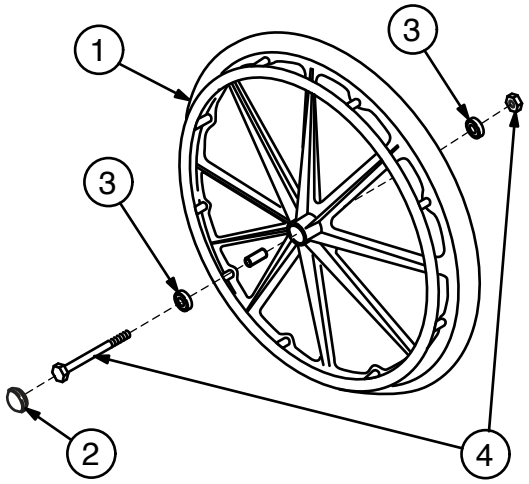

1 Rear wheel with handrim, 24" x 1", polyurethane tire (includes hub cap, bearings, and spacer; does not include axle or nut)	90763150A
2 Hub cap (10 each)	90763051A
3 Wheel bearing (10 each)	90763052A
4 Rear axle and nut (10 each)	90763053A

1 Rear wheel with handrim, 20" x 1" Hemi height, polyurethane tire (includes hub cap, bearings, and spacer; does not include axle or nut)	90763154A
2 Hub cap (10 each)	90763056A
3 Wheel bearing (10 each)	90763057A
4 Rear axle and nut (10 each)	90763058A

CASTER

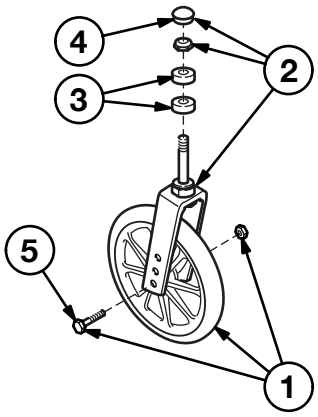

Complete caster (fork and wheel), 8" x 1" solid rubber tire	90763040A
1 Caster wheel, axle bearings, axle and nut	90763041A
2 Caster fork, stem nut and dust cap	90763042A
3 Caster stem bearing (10 each)	90763043A
4 Caster dust cap (10 each)	90763044A
5 Caster axle and nut (10 each)	90763045A

Complete caster (fork and wheel) for Hemi height, 6" x 1" solid rubber tire	91763040A
1 Caster wheel, axle bearings, axle and nut	91763041A
2 Caster fork, stem nut and dust cap	91763042A
3 Caster stem bearing (10 each)	91763043A
4 Caster dust cap (10 each)	91763044A
5 Caster axle and nut (10 each)	91763045A

FOOTREST, SWINGAWAY AND DETACHABLE

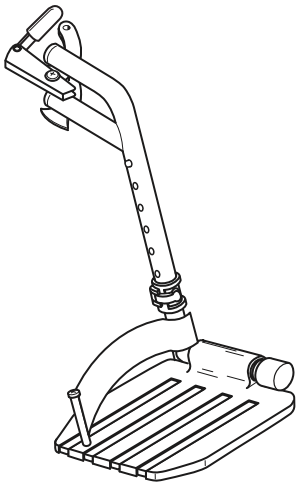

Footrest, pair, all widths
Includes right and left hanger with release and black composite footplate with extension and heel loop 90763030A

Black composite footplate, pair 90763033A

ELEVATING LEGREST, SWINGAWAY AND DETACHABLE

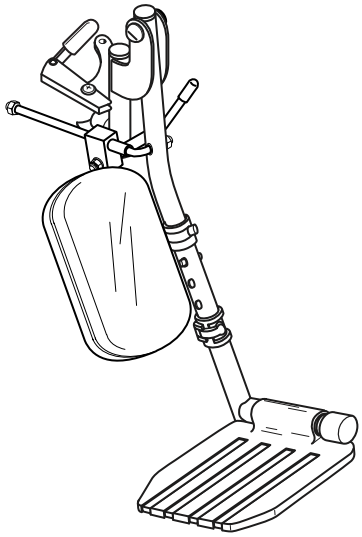

Low-pivot elevating legrest, pair, all widths
Includes right and left hanger with release, composite footplate with extension, and legrest panel (does not include heel loop) 90763031A

Black composite footplate, pair 90763033A

Elevating legrest panel kit
Includes 2 black padded panels and hardware 90763032A

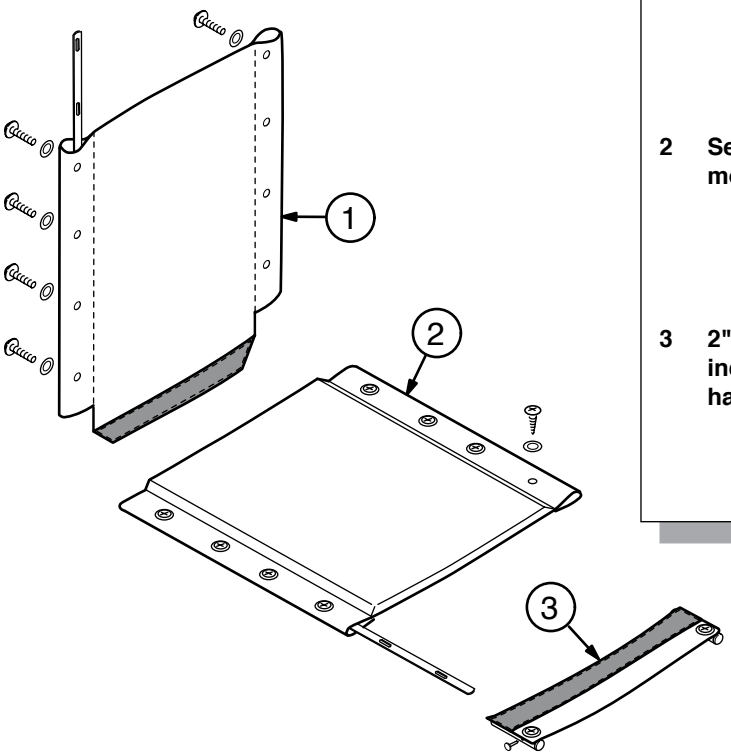

1	Back upholstery, black nylon, and mounting hardware	
	16" W	907632A1A
	18" W	907632A2A
	20" W	907632A3A
2	Seat upholstery, black nylon, and mounting hardware	
	16" W x 16" D	907632B1A
	18" W x 16" D	907632B2A
	20" W x 16" D	907632B3A
3	2" Seat extension kit, black nylon, includes tubes and mounting hardware	
	16" W	90763SE16
	18" W	90763SE18
	20" W	90763SE20

ACCESSORIES

Traveler L3 Plus accessories (not shown)

1	Heel loop, pair	90763064A
2	Wheel lock, pair, push to lock (includes rubber tips)	90763070A
3	Wheel lock extension, pair	90763062A
4	Positioning belt (auto style)	300-505
5	Anti-Fold bar	92523850
6	O2-IV holder	B10320F
7	O2 cylinder holder	B10325
8	Tipping sleeve (10 each)	90763006A



© 2016, GF Health Products, Inc. All Rights Reserved.

Everest & Jennings and Traveler are trademarks of
GF Health Products, Inc.,

GF Health Products, Inc. is an ISO 13485 Certified Company.