Everest & Jennings® by graham-field



ADVANTAGE LX MANUAL WHEELCHAIR USER MANUAL

SAVE THIS MANUAL FOR FUTURE USE.

EJ_3H02-INS-LAB-RevC24

CONTENTS

1 INTRODUCTION..... 3

2 IMPORTANT SAFETY PRECAUTIONS..... 4

3 GETTING STARTED..... 6

4 HANDLING TIPS..... 7

5 ADJUSTMENTS..... 10

6 TRANSPORTING THE ADVANTAGE LX..... 12

7 MAINTENANCE..... 13

8 TROUBLESHOOTING..... 17

9 LIMITED WARRANTY..... 18

10 INDEX..... 19

1 INTRODUCTION

Important safety, operating, and maintenance instructions that warrant your attention are included in this user manual. Read the entire manual carefully before operating your new wheelchair, and refer to it as often as necessary to help maintain good performance standards.

Consult your healthcare professional and GF Health Products, Inc. ("Graham-Field") authorized distributor for assistance in developing and learning safe and effective techniques for performing your daily activities according to your individual physical abilities and needs, and to make certain your wheelchair is properly prescribed and adjusted for your use.

The safety precautions in this manual are general warnings intended to be used only as basic guidelines. You may find it necessary to develop your own methods for safely solving frequently encountered challenges. Again, consult your professional medical advisors for their recommendations about safety methods, and never hesitate to ask for their assistance.

Your wheelchair should receive frequent, regularly scheduled maintenance, including an inspection of the mechanical parts, to ensure proper operation. Some suggested inspection procedures, troubleshooting procedures, and adjustment procedures are included in this manual. When it comes to service and repair, remember your Graham-Field authorized distributor knows your wheelchair best.

Thank you for choosing an Everest & Jennings® product. We at Graham-Field wish to assure you of our continuing commitment to provide innovation and quality in our products. The Advantage LX® is a manual, folding, lightweight wheelchair, suitable for frequent users who require a lightweight, portable wheelchair, fitted to their anatomy, without the need of customization or alteration to the center of gravity. The Advantage LX is intended for indoor and/or outdoor use.

The person performing adjustments on the Advantage LX has the responsibility of making certain that the user can safely operate the wheelchair with the adjustments selected. This person must evaluate the user's ability, weight, physical condition, the environment in which the wheelchair will be used, and the terrain over which the wheelchair will travel. We recommend the use of anti-tippers at all times.

⚠ **WARNING: When in use, anti-tippers must be installed in the downward position.**

Please note the following special statements, used throughout this manual, and their significance:

⚠ **WARNING: Indicates a potential hazard situation or unsafe practice that, if not avoided, could result in death or serious personal injury.**

⚠ **CAUTION: Indicates a potential hazard situation or unsafe practice that, if not avoided, could result in minor or moderate personal injury.**

▲ **NOTICE: Indicates a potential hazard situation or unsafe practice that, if not avoided, could result in product or property damage.**

Info: Provides application recommendations or other useful information to ensure that you get the most from your product.

2 IMPORTANT SAFETY PRECAUTIONS

IMPORTANT SAFETY PRECAUTIONS: ALWAYS FOLLOW THESE SAFETY PRECAUTIONS WHEN USING YOUR WHEELCHAIR. FAILURE TO DO SO COULD RESULT IN PERSONAL INJURY TO YOU OR OTHERS OR DAMAGE TO YOUR WHEELCHAIR.

Safety requires the constant attention of the wheelchair user and the attendant. It is extremely important to learn and always use safe methods of performing basic daily activities. Always consult your healthcare professional to determine those methods most suitable for your individual abilities.

Protect yourself and your wheelchair by having your Advantage LX serviced regularly. Whenever any part of your Advantage LX is not functioning properly, contact your Graham-Field authorized distributor immediately, as a hazardous situation could result, causing personal injury or damage to your wheelchair. **ONLY EXCELLENT CONDITION OF YOUR WHEELCHAIR IS ACCEPTABLE WHERE SAFETY IS CONCERNED**. Periodic inspection, adjustment, and replacement of worn parts will provide many years of superb performance.

WARNINGS

⚠ **WARNING: Advantage LX maximum weight capacity is 300 lb (136 kg), EVENLY DISTRIBUTED.**

⚠ **WARNING: DO NOT operate this wheelchair on streets or roadways.**

⚠ **WARNING: DO NOT operate this wheelchair on hilly or rough terrain, sand, wet or icy surfaces, or surfaces with impaired traction. Ensure that pathway is clear of all obstacles.**

⚠ **WARNING: DO NOT turn wheelchair while going downhill, as wheelchair could tip over.**

⚠ **WARNING: DO NOT attempt inclines without anti-tippers installed in the downward position. DO NOT attempt any incline or decline greater than six degrees (10% grade, or one foot of rise or fall per ten feet of ramp length).**

⚠ **WARNING: This wheelchair DOES NOT offer seating or occupant restraint equivalent to the seat provided in a motor vehicle! To increase your safety while traveling in a motor vehicle, ALWAYS transfer to the vehicle seat and use the restraint provided by the vehicle manufacturer.**

⚠ **WARNING: DO NOT tie down or attach anything to the wheels. This could cause tipping and possibly result in injury or damage to the wheelchair.**

⚠ **WARNING: The footplates' lowest point should clear the ground by at least 2 1/2 inches, to permit proper clearance of potential obstruction.**

⚠ **WARNING: Doing a "wheelie" (tilting the wheelchair backward until it reaches its balance point) is dangerous and could result in personal injury to the user.**

⚠ **WARNING: DO NOT stand or step on the footplates while transferring to or from your wheelchair. This could cause the wheelchair to tip or may cause personal injury or damage to your wheelchair.**

⚠ **WARNING: DO NOT place your hands between seat rail and side panel.**

⚠ **WARNING: ALWAYS engage wheel locks before transferring, using a wheelchair lift or using an elevator.**

⚠ **WARNING: Ensure wheelchair is on a stable, level surface and engage wheel locks before and during transfer.**

⚠ **WARNING: Operate ONLY with anti-tippers in place when leaning or tipping. When in use, anti-tippers MUST be installed in the downward position.**

⚠ **WARNING: DO NOT lean over the top of the wheelchair back. This could cause the wheelchair to tip over.**

⚠ **WARNING: To reduce the risk of tipping before leaning or reaching forward, sit back in the seat and rotate casters fully toward front of wheelchair.**

⚠ **WARNING: Unauthorized modification or the use of non-Everest & Jennings replacement parts could change the structure of the wheelchair, void the warranty, and create a hazardous condition resulting in serious personal injury.**

⚠ **WARNING: DO NOT lean on this wheelchair or use it as a walker—these are practices which could result in loss of balance and personal injury.**

⚠ **WARNING: DO NOT use your wheelchair on escalators.**

⚠ **WARNING: Wheel locks are NOT brakes. DO NOT use the wheel locks to slow down your wheelchair, or while the wheelchair is moving. Wheel locks are ONLY intended to keep the wheelchair in place when it is at a complete stop.**

⚠ **WARNING: GF Health Products, Inc. specifically disclaims responsibility for any personal injury or property damage which may occur during any use which does not comply with federal, state, or local laws or ordinances.**

3 GETTING STARTED

Please familiarize yourself with main components, identified in Advantage LX illustration below.

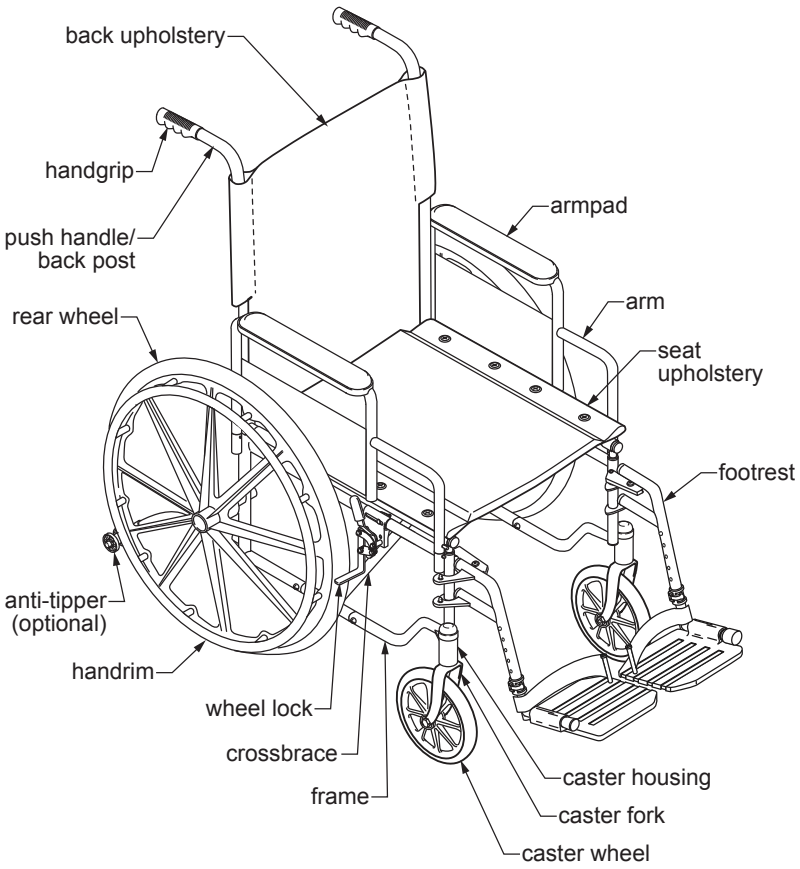

4 HANDLING TIPS

The Everest & Jennings Advantage LX has been designed and engineered to perform as a stable and well balanced unit when used for its intended purpose. However, it is possible to tip the Advantage LX over if it is used improperly. We urge you to learn the characteristics of your wheelchair. It is most important to learn safe methods to perform the daily activities basic to your lifestyle. Consult your medical professionals for assistance in developing the skills and proper techniques to perform all activities safely.

BALANCE

Proper balance is the key to maintaining the stability of your wheelchair. Reaching, bending, and transferring to or from a wheelchair will change the weight distribution and center of gravity of you and your wheelchair. When performing such activities, do so as instructed in the following paragraphs to avoid tipping the wheelchair.

TRANSFER ACTIVITIES

⚠ **WARNING: ALWAYS ensure that the wheelchair is on a stable, level surface and engage wheel locks before transfer.**

⚠ **WARNING: DO NOT step on the footplates; this could cause the wheelchair to tip. Fold them up, and either detach them, or swing them aside.**

⚠ **WARNING: There is a critical moment when there is little or no seat platform beneath you. Take every precaution to reduce this unsupported distance before you attempt transfer.**

Transferring into or out of a wheelchair is a very difficult maneuver. Exercise extreme care when transferring without the aid of either an attendant or a patient lift. Consult your physician, nurse, or physical therapist for assistance in developing your individual technique. Make sure the wheelchair is stabilized, and will not move or slide during the transfer. Take extra precaution to prevent tipping. Use good body mechanics to prevent personal injury.

REACHING / BENDING

⚠ **WARNING: ALWAYS turn the casters frontward to provide stability while reaching. If in doubt, ask for assistance or use a device that will extend your reach without requiring you to shift your weight.**

Although it is not recommended, you may find it occasionally necessary to lean or reach from your wheelchair. Consult with your healthcare professional for assistance in developing your personal safe reaching or moving techniques suited to your ability and restrictions.

Forward or Sideward

⚠ **WARNING: DO NOT attempt to reach objects if you are required to move forward in the seat. DO NOT attempt to retrieve objects from the floor if you must reach down between your knees. DO NOT shift your weight in the direction that you are reaching and/or bending; this could cause the wheelchair to tip.**

1. Maneuver the wheelchair as close as possible to the object you wish to reach.
2. Rotate both casters fully forward, go forward, and then back the wheelchair toward the object to swing the casters fully forward.
3. Engage both wheel locks.
4. Ensure the casters are rotated fully forward before reaching. If not, repeat step 2.

Backward

⚠ **WARNING: DO NOT engage the wheel locks while reaching or bending backward. Should your weight suddenly shift accidentally, it is better to roll in that direction than to tip over.**

⚠ **WARNING: DO NOT lean over the back upholstery; this could cause the wheelchair to tip.**

1. Maneuver the wheelchair as close as possible to the object; the rear wheels will limit how close you can get.
2. Rotate both casters fully forward, go forward, and then back the wheelchair toward the object to swing the casters fully forward.
3. Reach only as far as your arm will extend without changing your sitting position. If in doubt, reposition the wheelchair or ask for assistance.

RAMPS AND INCLINES

⚠ **WARNING: During descent, the footplates' lowest point should be no closer to the ground than 2 1/2 inches to permit proper clearance.**

⚠ **WARNING: DO NOT attempt inclines without anti-tippers installed in the downward position. DO NOT attempt any incline or decline of more than 6 degrees (10% grade, or one foot of rise or fall per ten feet of ramp length).**

⚠ **WARNING: DO NOT use wheel locks to slow your descent. Attempting to use wheel locks is likely to result in accidental locking that could cause the wheelchair to stop abruptly, suddenly pitch forward, or tip sideways.**

⚠ **WARNING: Avoid changing direction while descending a ramp or incline, as this could cause instability.**

Most people are capable of negotiating short inclines without assistance, depending upon upper body strength, endurance, and the degree of incline. Know your own capabilities and limitations in terms of strength and endurance before attempting to negotiate an incline or decline. Practice with an attendant or healthcare professional first before attempting any inclines, declines, curbs or ramps. Always inspect the ramp for hazards such as holes, slippery or uneven surfaces, etc. before starting up or down. If you can not see the entire ramp, ask someone to inspect it for you.

Ascent

Lean the upper part of your body slightly forward as you ascend the incline. If it becomes necessary to stop on the incline, avoid any abrupt or sudden forward movement as you resume climbing; this could cause tipping.

Descent

Always face forward when going down a ramp, but do not lean forward; this could cause tipping. Lean slightly backward to increase stability. It is critical to keep the wheelchair under control at all times. Descent should be made slowly and safely by grasping the handrims; however, use care, as friction heat will be generated. We recommend the use of gloves to reduce the effects of friction heat, but going slower is a better alternative.

CURBS AND STEPS

Curbs, steps and stairways are dangerous obstacles that confront the wheelchair user. When you encounter curbs, find a way around, or use the ramps now available in most locations. If you encounter steps and there is no ramp available, avoid the steps by utilizing the disabled designated elevators now required in most locations.

⚠ **WARNING: NEVER attempt to negotiate steps, stairs or escalators in your Advantage LX.**

5 ADJUSTMENTS

The Advantage LX offers several adjustments to make it easier and more comfortable to drive. Section 7, MAINTENANCE, offers preventive maintenance suggestions for keeping your wheelchair in excellent condition; ensure that all components are in excellent condition before adjusting. The following are recommended methods; after a few adjustments, you may develop your own. Always consult your Graham-Field authorized distributor for assistance.

The person performing adjustments on the Advantage LX has the responsibility of making certain that the user can safely operate the wheelchair with the adjustments selected. This person must evaluate the user's ability, weight, physical condition, the environment in which the wheelchair will be used, and the terrain over which the wheelchair will travel.

All adjustments and their page locations are referenced in the index at the end of this manual. Specific tools needed to perform each adjustment are identified in adjustment directions. A complete list of tools needed to perform all adjustments in this section follows:

Hex wrench furnished with wheelchair
M13 wrench
M10 wrench
M5 hex key

REAR WHEELS & CASTERS

We recommend that you do not replace or adjust rear wheel or caster components yourself, since special tools and training are required. Please contact your Graham-Field authorized distributor when your rear wheels or casters need adjustment, or if you wish to change seat height.

ARMS

Info: Fixed arms are not removable. Only detachable Advantage LX arms, as shown below, are removable.

Remove arm

1. Depress arm release pin until it unlocks.
2. Hold arm by center of armpad. Lift straight up and off.

Install arm

Hold arm by center of armpad. Lower arm straight down into sockets and push to lock. Ensure release pin is locked in place.

⚠ **WARNING: Ensure arm release is locked in place before occupying or operating wheelchair.**

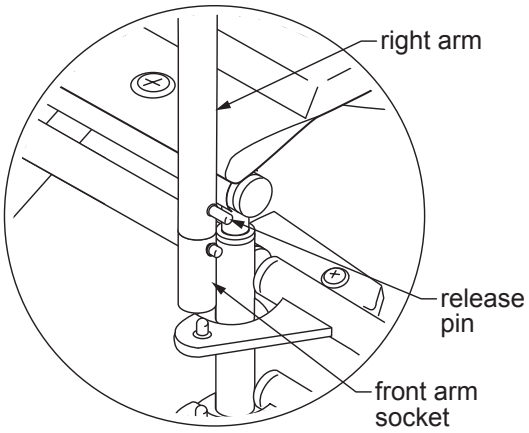

remove arm

FRONT RIGGING

FOOTREST—DETACHABLE, SWINGAWAY

⚠ **WARNING: The footplates' lowest point should be no closer to the ground than 2 1/2 inches, to permit proper clearance.**

⚠ **WARNING: DO NOT stand on the footplates; this could cause the wheelchair to tip.**

Remove footrest

1. To release lock, pull swingaway release lever forward, toward front of wheelchair. Footrest will swing outward.
2. To remove, lift footrest straight up off wheelchair hinge pins.

Attach footrest

1. Set footrest on wheelchair (so that footrest hinge plates engage wheelchair hinge pins).
2. Swing footrest inward.
3. Ensure swingaway release lever is locked in a rearward position, toward back of wheelchair.

⚠ **WARNING: Ensure footrests are locked in place before occupying or operating wheelchair.**

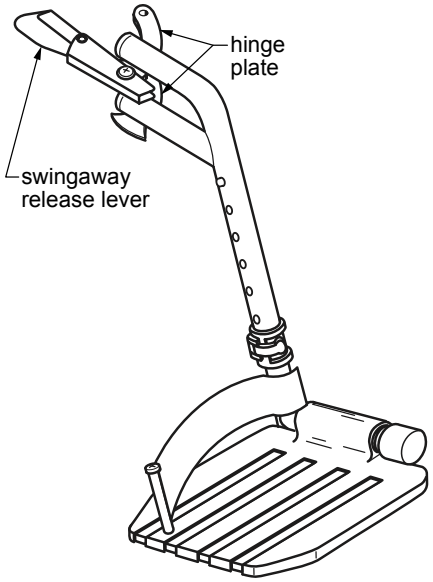

remove footrest (left shown)

Adjust footplate extension length

1. See picture at right. Loosen latch to free footplate extension inside hanger.
2. Press down on the locking button and adjust the footplate to the desired length. Ensure the locking button is completely extended and securely fastened in the adjustment hole.
3. Fasten latch to secure footplate extension inside hanger.
4. Repeat steps 1-3 for the other footplate extension.
5. Ensure both footplate extensions are securely fastened and that minimum ground clearance is 2 1/2 inches.

⚠ **WARNING: Ensure footplates are securely fastened BEFORE occupying or operating wheelchair.**

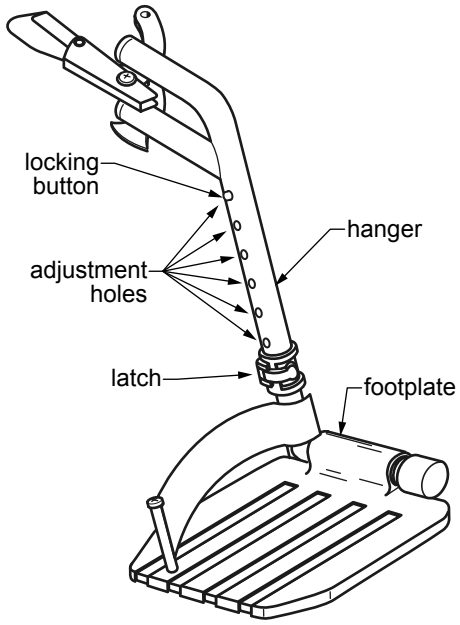

footplate extension, adjust length

ELEVATING LEGREST—DETACHABLE, SWINGAWAY

⚠ **WARNING: The footplates' lowest point should be no closer to the ground than 2 1/2 inches, to permit proper clearance.**

⚠ **WARNING: DO NOT stand on the footplates; this could cause the wheelchair to tip.**

Remove elevating legrest

1. To release lock, pull swingaway release lever forward, toward front of wheelchair. Legrest will swing outward.
2. To remove, lift legrest straight up off wheelchair hinge pins.

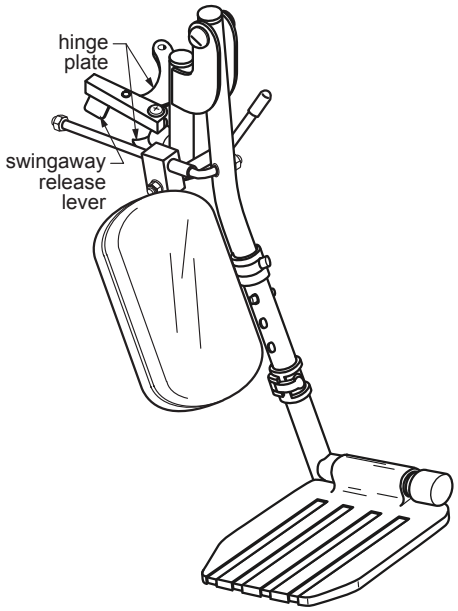

remove elevating legrest

Attach elevating legrest

1. Set legrest on wheelchair (so that legrest hinge plates engage wheelchair hinge pins).
2. Swing legrest inward.
3. Ensure legrest is locked in place and that swingaway release lever is locked in a rearward position, toward back of wheelchair.

⚠ **WARNING: Ensure legrests are locked in place BEFORE occupying or operating wheelchair.**

Adjust legrest elevation

⚠ **CAUTION: It is possible to RAISE the elevating legrest without moving the legrest release lever. As a safety feature, however, in order to LOWER the elevating legrest you MUST move the legrest release lever. This is to prevent the legrest from accidentally dropping while the user's leg is elevated.**

⚠ **WARNING: Ensure elevating legrests are locked in place BEFORE occupying or operating wheelchair.**

Raise elevating legrest

Slowly rotate the legrest up to the desired position. Ensure elevating legrest is locked in position.

Lower elevating legrest

1. To allow the elevating legrest to lower without dropping suddenly, support its weight and move the release lever forward.
2. Slowly lower elevating legrest to desired position.
3. Release lever. Ensure elevating legrest is locked in position before letting go of legrest.

Adjust elevating legrest panel position

The legrest panel can be rotated up and out of the way. Refer to picture above.

1. To adjust panel, hold the panel and rotate it upward.
2. To return panel to position, hold the panel and rotate downward. The panel will stop at the proper position.

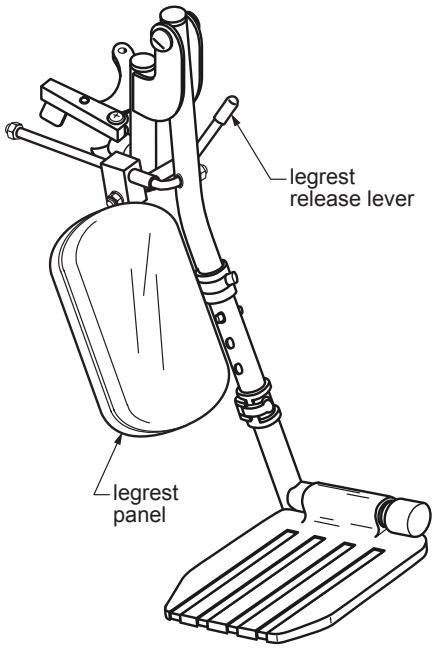

adjust legrest

⚠ **WARNING: Ensure legrest panels are locked in place BEFORE occupying or operating wheelchair.**

Adjust legrest footplate extension length

See **Adjust footplate extension length** in Footrest—Detachable, Swingaway section.

CROSSBRACES

Tighten crossbraces

M13 wrench, M5 hex key

Check the crossbraces to ensure that the bolt and nut securing both crossbraces in the center of the wheelchair are secure (crossbraces should be loose enough to fold easily, yet snug enough to take up excess play). Use an M13 wrench and M5 hex key to tighten.

WHEEL LOCKS

Adjust wheel locks

M10 wrench

1. Use an M10 wrench to loosen the adjustment bolt until the wheel lock slides on the frame.
2. Place the wheel lock in the locked position and slide it into contact with the tire.
3. Place the wheel lock in the unlocked position and slide it 3/8" closer to the tire.
4. Use an M10 wrench to tighten the adjustment bolt and engage the wheel lock to check the fit. The wheel lock should indent the tire at least 3/8".
5. Repeat steps 1-4 for other wheel lock. Tighten the adjustment bolts securely to eliminate wheel lock movement on frame.

⚠ **WARNING: Ensure that wheel locks are adjusted so that they lock in place appropriately BEFORE occupying or operating wheelchair.**

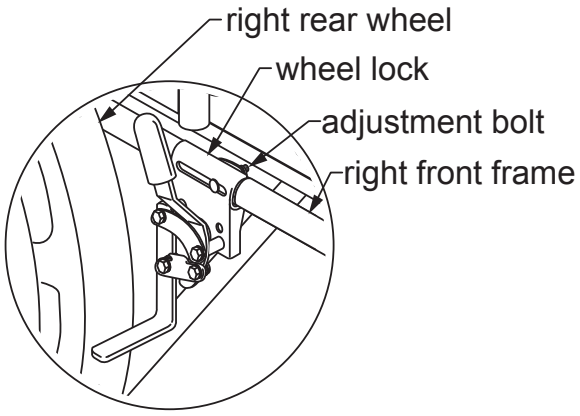

wheel lock shown unlocked

6 TRANSPORTING THE ADVANTAGE LX

⚠ **WARNING: This wheelchair does NOT offer seating or occupant restraint equivalent to the seat provided in a motor vehicle! To increase your safety while traveling in a motor vehicle, ALWAYS transfer to the vehicle seat and use the restraint provided by the vehicle manufacturer.**

The Advantage LX can easily be transported by folding the wheelchair:

1. Detach front rigging from wheelchair.
2. Remove the seat cushion, if so equipped.
3. Fold the wheelchair: Pull up sharply on the seat sling at front and rear center at the same time. To fold wheelchair completely, tip the wheelchair sideways (so wheel won't drag) and press sides together.

REASSEMBLY

1. Push down with even pressure on seat rails on both sides.

⚠ **WARNING: DO NOT place your hand between seat rail and side panel.**

2. Attach footrests or legrests to wheelchair.
3. Reinstall the seat cushion, if so equipped.

⚠ **WARNING: Ensure footrests or legrests are locked in place BEFORE occupying or operating wheelchair.**

7 MAINTENANCE

Protect your E&J® Advantage LX by having it serviced regularly. Proper care and maintenance are essential to keep your wheelchair in safe working condition. Periodic inspection, adjustment, and replacement of worn parts will provide many years of superb performance. When you believe that a component or part of your Advantage LX is not functioning properly, contact your Graham-Field authorized distributor immediately, as a potentially hazardous condition could result. Only excellent condition is acceptable where safety is concerned.

Service manual

There is no service manual for the Advantage LX. Please contact your Graham-Field authorized distributor with service questions not answered by this manual.

Info: We recommend that you have a Graham-Field authorized distributor perform a six month maintenance check, as the authorized distributor may find and correct a problem which might otherwise go undetected and eventually cause more serious problems and/or personal injury.

Do-it-yourself maintenance

You can do many of the scheduled maintenance tasks yourself, if you have mechanical ability and a few basic tools. Refer to the maintenance schedule on the next page for the recommended regularity of each procedure. If any maintenance procedure is not clear to you, ask your Graham-Field authorized distributor for assistance.

▲ **NOTICE: Improper maintenance can cause operating problems and may affect your warranty.**

⚠ **WARNING: Unauthorized modification or the use of non-Everest & Jennings replacement parts could change the structure of the wheelchair, void the warranty, and create a hazardous condition resulting in serious personal injury.**

MAINTENANCE SCHEDULE				
Procedure	Perform at least every			
	Week	Month	3 Months	6 Months
Check tire wear	✔			
Check handrims	✔			
Check wheel lock engagement	✔			
Check anti-tippers (optional)	✔			
Wipe off frame with soft cloth	✔			
Check handgrips		✔		
Check upholstery		✔		
Check rear wheel adjustment		✔		
Check arms		✔		
Check backposts / push handles		✔		
Check footrests / elevating legrests		✔		
Clean frame			✔	
Check caster stem rotation			✔	
GF distributor maintenance check				✔
Check rear wheel bearings (distributor)				✔
Check caster bearings (distributor)				✔

List of tools

The tools and cleaning supplies listed will assist in the procedures outlined in Section 7.

30 weight oil (available at most auto parts stores)
Phillips-head screwdriver
soft cloth
mild soap and water solution

General care

Always evaluate the overall operation of your wheelchair. It should function with ease and should travel straight without excessive drag or pull to one side.

Remember, your Graham-Field authorized distributor knows your wheelchair best when it comes to service and repairs. Contact your authorized distributor with any questions or concerns regarding the safe operation and maintenance of your wheelchair. Regular maintenance is essential for your safety and continued operation of your wheelchair.

Check tire wear

Examine tires at least once a week for surface wear and cracks and replace them as needed. Replace tires when they become loose on the rims or cracks appear.

Check handrims

Check handrims at least once a week. Inspect each handrim for rough or sharp edges and, if any are found, replace handrims immediately. Ensure all hardware is properly aligned and secure.

Check wheel lock engagement

Check wheel lock engagement at least once a week. See **Adjust wheel locks** in Section 5 to adjust wheel lock engagement. If a wheel lock is worn or damaged, replace it immediately. Inspect the hardware for looseness or signs of wear.

Ensure the locking mechanism operates smoothly. The locking assembly should be tight enough so that the wheel cannot rotate or the lock slip. Check that the locking shoe does not press against the tire when in the unlocked position. Excessive force should not be required to either engage or release wheel locks. Oil the wheel lock pivot points with one or two drops of 30 weight oil. Remove excess oil and dirt.

Check anti-tippers (optional)

Check the anti-tippers at least once a week. Ensure the anti-tippers are securely fastened and properly positioned.

⚠ **WARNING: When in use, anti-tippers MUST be installed in the downward position.**

Check handgrips

Check handgrips at least once a week. Ensure they are not ripped; ensure they are tight and securely fastened.

Check upholstery

Check upholstery at least once a month. Inspect for rips, tears and worn spots. Ensure all upholstery-attaching screws are present, properly aligned, and well-secured. Use a Phillips screwdriver to tighten upholstery mounting screws. Check attaching screws for sharp edges or stripped screws, and replace if found.

⚠ **WARNING: Worn or torn upholstery, or upholstery with loose hardware, MUST be replaced immediately. It may not support body weight.**

Check rear wheel adjustment

Inspect the wheels at least once a month. Check alignment by elevating the rear of the wheelchair on a stable object until the rear wheels clear the ground, or placing the wheelchair upside down in a stable position such that the wheels can spin freely. Spin the wheels; there should be no wobble or sideplay, and the wheels should spin freely without binding. The bearings should be clean and rotate smoothly. Check rim sideplay to verify that bearings are not too loose. If there is a problem, contact your Graham-Field authorized distributor. If adjustment is required, this should be done by your Graham-Field authorized distributor only.

Check arms

Check arms at least once a month. Inspect for sharp edges or cracks which could weaken the arm, and replace if found. Ensure all attaching screws are present and tight. Use a Phillips screwdriver to tighten armpad mounting screws. Check for burrs on the screw heads and replace if found. Ensure that screws do not extend into the padding. Confirm that the posts at base of arm fit correctly in the sockets, snug but not binding.

Check backposts / push handles

Check backposts at least once a month. Ensure that all mounting hardware is securely fastened and that the backposts are not bent or damaged. Contact your authorized distributor if you observe cracking or peeling paint or plating.

Check footrests & elevating legrests

Check footrests and legrests at least once a month. Inspect the locking mechanisms to confirm sure fit. Check for cracks, burrs, or sharp edges, and replace if found. Ensure that the footrest or legrest will automatically lock securely in place and will not accidentally unlock. If equipped with heel loops, ensure the anchor bolts are tight and secure.

Cleaning your Advantage LX

Wipe off the frame frequently, at least once a week, using a soft cloth. Dry the wheelchair immediately if exposed to moisture. Clean the frame every three months with a mild soap and water solution. The frame does not need to be waxed. Do not use solvents, abrasive waxes, caustic chemicals or spray silicone. Never use abrasive cleansers; they could scratch the finish. Never use steam or high pressure cleaners. Clean upholstery and plastic components at least once a month with a mild soap and water solution.

Check casters

Check the caster stems for proper rotation at least every three months. The caster forks must swivel freely to facilitate steering and handling. Adjusting the stem nut varies the amount of force required to turn the caster. If the stem nut is too loose, the caster will flutter or shimmy; if too tight, the wheelchair will be difficult to steer. If the caster stems require adjustment, or the stem bearings require replacement, contact your Graham-Field authorized distributor. Ensure that stems are firmly attached to forks, and that forks and stems are not bent. Evaluate all threads, locking nuts and bearings.

Check wheel bearings

Have your Graham-Field authorized distributor check caster and rear wheel axle bearings at least every six months.

8 TROUBLESHOOTING

Continual use of your Advantage LX necessitates maintenance, especially if the factory-set adjustments have been altered. The following troubleshooting guide lists several common problems that may occur, and offers corrective actions for each. If you are unsure of the solution or unable to diagnose the problem, do not hesitate to ask your Graham-Field authorized distributor for assistance.

SYMPTOM						PROBABLE CAUSE AND CORRECTIVE ACTION
looseness in wheelchair	squeaks / rattles	caster flutter	sluggish turning	chair veers left	chair veers right	
✓	✓	✓	✓			Nuts and / or bolts may be loose. If so, tighten. Bolts should be snug.
		✓	✓	✓	✓	Rear wheels and / or casters may be adjusted improperly. Ensure that both rear wheels are mounted in identical positions, and that casters are mounted in identical positions.
		✓	✓	✓	✓	Caster stem(s) may be adjusted improperly. See distributor to correct adjustment.

Info: Use only Everest & Jennings replacement parts. An Advantage LX parts catalog is available at www.grahamfield.com to assist in the ordering of parts.

⚠ **CAUTION: A complete inspection of your wheelchair, including maintenance, servicing and safety checks, should be performed by a Graham-Field authorized distributor every six months.**

⚠ **WARNING: Unauthorized modification or the use of non-Everest & Jennings replacement parts could change the structure of the wheelchair, void the warranty, and create a hazardous condition, which could result in serious personal injury.**

9 LIMITED WARRANTY

SCOPE OF WARRANTY

GF Health Products, Inc. ("GF") warrants to the original purchaser only that it will replace or repair components, at GF's sole discretion, that are defective in material or workmanship under normal use and service. All warranties are conditioned upon the proper use of the products strictly in accordance with good commercial practice and applicable GF instructions and manuals, including proper use and maintenance. To the extent that a third party warrants a component, GF conveys all of its rights under that warranty to the original purchaser, to the extent permitted.

This limited warranty shall only apply to defects that are reported in accordance with the provisions set forth in this warranty document, within the applicable warranty period and which, upon examination by GF or its authorized representative, prove to be a warranty item. (See Obtaining Warranty Service below) This limited warranty is not transferable.

The warranted components and time period are set forth below:

Sideframes and crossbraces: . . . . . .one year
Wheels, handrims, front rigging, forks: . . . . . .one year
All other durable components not listed above:. . . . . .six months

* Labor is not included in the warranty.

† Upholstery is only warranted on material supplied by GF.

‡ The warranty period is as designated above. If a part is replaced under warranty, the original warranty period will not be affected. All other replacement parts will be subject to the warranty period specified.

The applicable warranty period shall commence from date of shipment to the original customer, unless there is an expiration date on the component in which case the warranty shall expire on the earlier of warranty period or the expiration date.

OBTAINING WARRANTY SERVICE

Customers located in the United States who wish to report a warranty issue, must contact GF directly by calling 1.770.368.4700 or by e-mailing a request to cs@grahamfield.com. Customers located outside the United States must contact the Distributor from whom they purchased the products. In both cases, further directions will be provided once the initial contact is made. This limited warranty shall only apply to defects that are reported within the applicable warranty period. Failure to abide by the specific directions will result in denial of the warranty claim.

The warranty does not cover and GF shall not be liable for the following:

1) Defects, damage, or other conditions caused, in whole or in part, by misuse, abuse, negligence, alteration, accident, freight damage, tampering or failure to seek and obtain repair or replacement in a timely manner;
2) Products which are not installed, used, or properly cleaned and maintained as required in the official manual for the applicable product;
3) Products considered to be of a non-durable nature including, but not limited to: filters, fuses, gaskets, lubricants, and charts;
4) Accessories or parts not provided by GF;
5) Matching of color, grain or texture except to commercially acceptable standards;
6) Changes in color caused by natural or artificial light:
7) Charges by anyone for adjustments, repairs, replacement parts, installation or other work performed upon or in connection with such products which are not expressly authorized in writing, in advance, by GF;
8) Any labor or shipping charges incurred in the replacement part installation or repair;
9) Costs and expenses of regular maintenance and cleaning; and
10) Representations and warranties made by any person or entity other than GF.

ENTIRE WARRANTY, EXCLUSIVE REMEDY AND CONSEQUENTIAL DAMAGES DISCLAIMER

THIS WARRANTY IS GF'S ONLY WARRANTY AND IS IN LIEU OF ALL OTHER WARRANTIES, EXPRESS OR IMPLIED. GF MAKES NO IMPLIED WARRANTIES OF ANY KIND INCLUDING ANY IMPLIED WARRANTIES OF MERCHANTABILITY OR FITNESS FOR A PARTICULAR PURPOSE. IF ANY MODEL OR SAMPLE WAS SHOWN TO THE CUSTOMER, SUCH MODEL OR SAMPLE WAS USED MERELY TO ILLUSTRATE THE GENERAL TYPE AND QUALITY OF THE PRODUCT AND NOT TO REPRESENT THAT THE PRODUCT WOULD NECESSARILY CONFORM TO THE MODEL OR SAMPLE IN ALL RESPECTS. THIS WARRANTY IS LIMITED TO THE REPAIR OR REPLACEMENT OF THE DEFECTIVE PARTS. GF SHALL NOT BE LIABLE FOR AND HEREBY DISCLAIMS ANY DIRECT, SPECIAL, INDIRECT, INCIDENTAL, EXEMPLARY OR CONSEQUENTIAL DAMAGES, INCLUDING, BUT NOT LIMITED TO: DAMAGES FOR LOSS OF PROFITS OR INCOME, LOSS OF USE, DOWNTIME, COVER, OR EMPLOYEE OR INDEPENDENT CONTRACTOR WAGES, PAYMENTS AND BENEFITS. CERTAIN STATES MAY CONFER ADDITIONAL RIGHTS REGARDING WARRANTIES AND IN THOSE STATES GF'S LIABILITY AND THE LIABILITY OF GF'S SUPPLIERS, SHALL BE LIMITED TO THE FULLEST EXTENT PERMITTED BY LAW.

The warranties contained herein, together with GF's current Terms and Conditions, contain all the representations and warranties with respect to the subject matter of this document, and supersede all prior negotiations, agreements and understandings with respect thereto. The recipient of this document hereby acknowledges and represents that it has not relied on any representation, assertion, guarantee, warranty, collateral contract or other assurance, except those set out in this document.

For additional information on this product or this warranty, please contact a GF Customer Service Representative.

NOTES:

1) Additional terms and conditions may apply.
2) Freight claims must be notated on the appropriate shipping documents and must be made with immediacy. International, federal and state regulations govern specific requirements for freight claims. Failure to abide by those regulations may result in a denial of the freight claim. GF will assist you in filing the freight claim.
3) Claims for any short shipment must be made within three (3) days of the invoice date.

10 INDEX

A
Adjustments 9
Advantage LX, illustration 6
Anti-tippers, check 15
Arm, install 9
Arm, remove 9
Arms, check 16

B
Backposts, check 16
Backward 7
Balance 6

C
Casters 9
Caster stems, check 16
CAUTION statement, significance 4
Cleaning your Advantage LX 16
Crossbraces, tighten 12
Curbs and steps 8

E
Elevating legrest, attach 11
Elevating legrest, lower 11
Elevating legrest, raise 11
Elevating legrest, remove 11
Elevating legrest—detachable, swingaway 11
Elevating legrest elevation, adjust 11
Elevating legrest panel position, adjust 11

F
Footrest, attach 10
Footrest, remove 10
Footrest—detachable, swingaway 10
Forward, Sideward 7

G
Getting started 6
General Care 14

H
Handling tips 6
Handrims, check 14
Handgrips, check 15

I
Info statement, significance 4
Introduction 3

M
Maintenance 13

N
NOTICE statement, significance 4

R
Ramps and Inclines 8
Reaching / bending 7
Rear wheel adjustment, check 16
Rear wheels 9
Reassembly 13

S
Safety precautions 4

T
Tires, check 14
Tools, for adjustment, list 13
Tools, for maintenance, list 14
Transfer activities 7
Transporting the Advantage LX 12
Troubleshooting 17

U
Upholstery, check 15

W
Warnings 4
WARNING statement, significance 3
Warranty, limited 18
Wheel bearings, check 16
Wheel lock engagement, check 15
Wheel locks, adjust 12


Everest & Jennings
by graham-field