Advantage LX

Everest & Jennings®

A Graham-Field® Family Brand

PARTS CATALOG

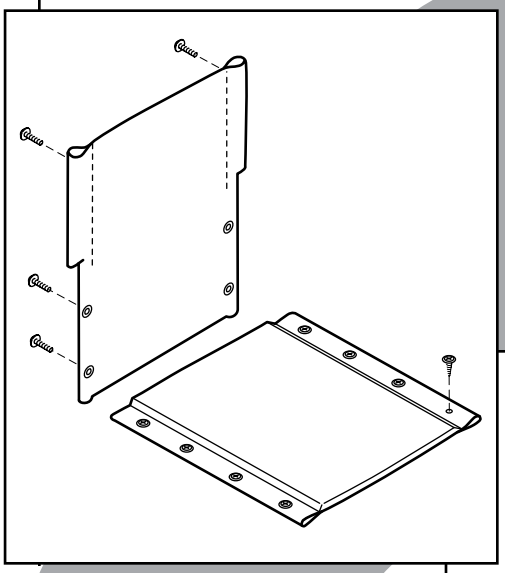

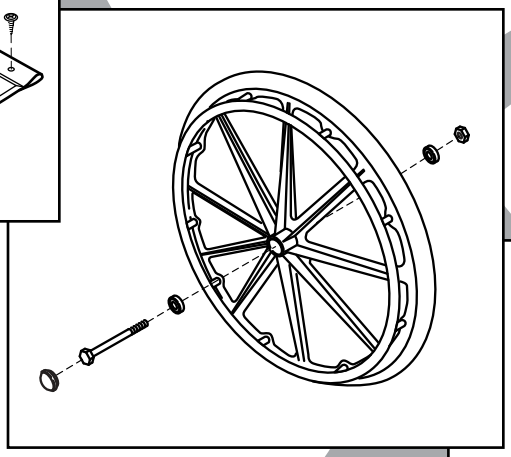

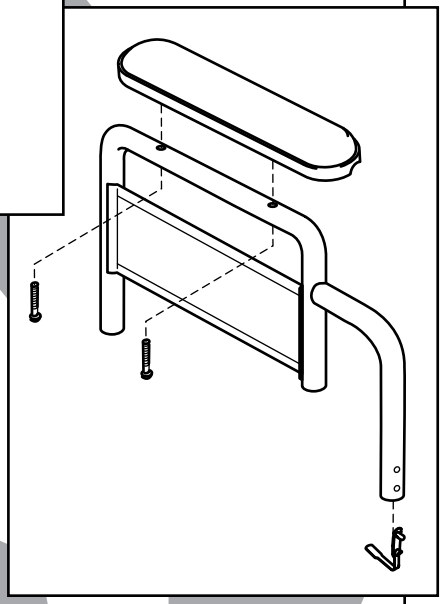

Everest & Jennings®

by graham-field

CONTENTS

SIDEFRAME (FIXED ARM), CROSSBRACE, ARM PAD KIT 3

SIDEFRAME (DETACHABLE ARM), CROSSBRACE.....4

ARM, DETACHABLE 5

CASTER.....5

REAR WHEEL 5

FRONT RIGGING, DETACHABLE 6

UPHOLSTERY 7

ACCESSORIES 7

SIDEFRAME (FIXED ARM), CROSSBRACE, ARM PAD KIT

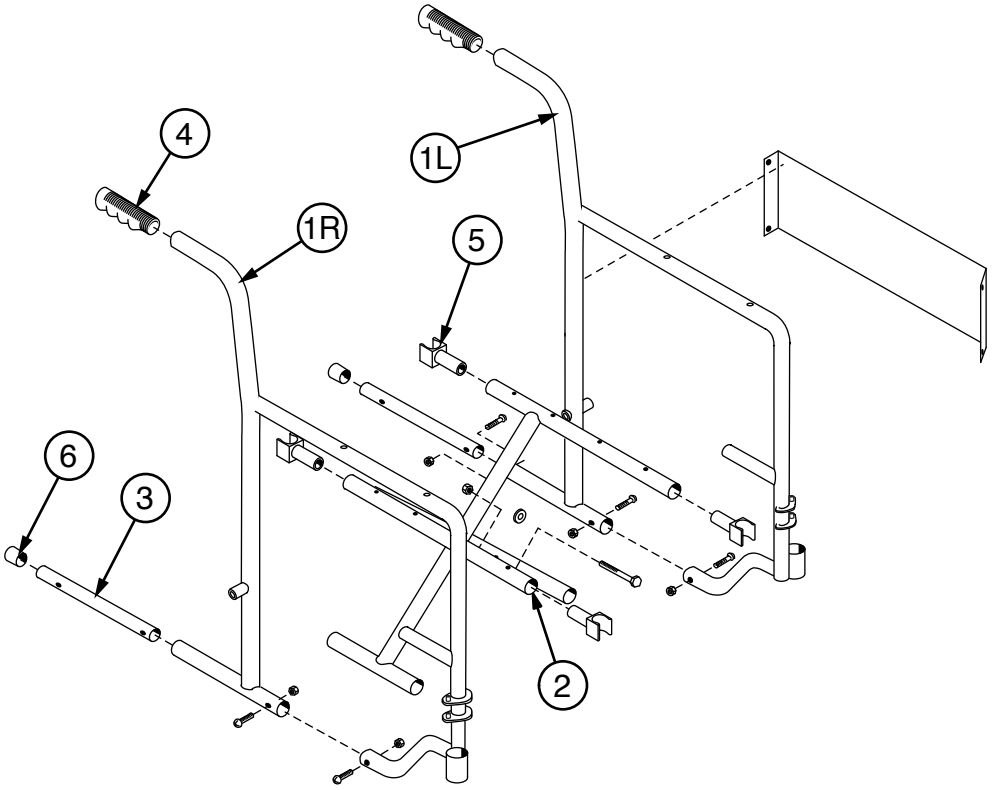

1 Sideframe, fixed arm:
Includes side panel

Right 90763501B
Left 90763502B

2 Crossbrace, pair:
Includes center bolt and nut

16″W 907635H1B
18″W 907635H2B

3 Bottom inner rail kit: Includes bottom inner rail (2 each) and screw and nut that hold bottom inner rail (4 each)..... 90763503

4 Grip (10 each) 90763005

5 Seat rail guide (4 each) 90763004

6 Tipping sleeve (10 each)..... 90763006

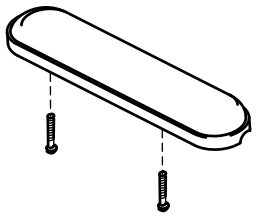

Arm pad kit: Includes 2 black full-length arm pads and mounting screw..... 90763524B

SIDEFRAME (DETACHABLE ARM), CROSSBRACE

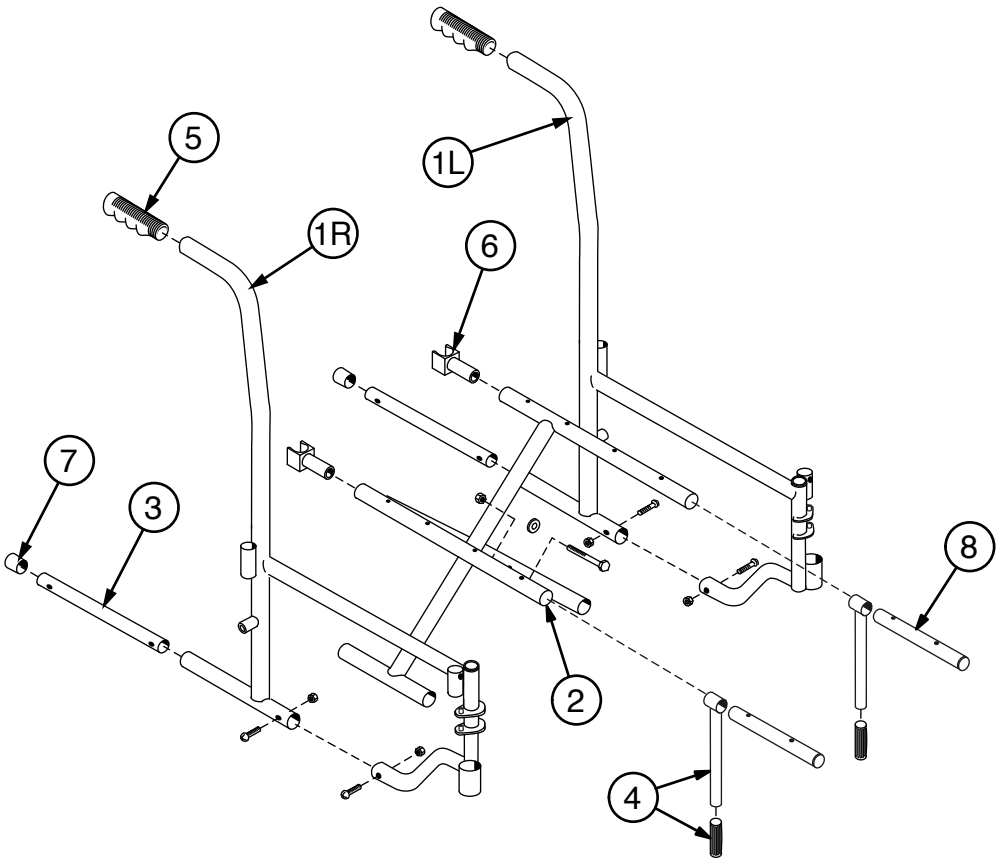

1 Sideframe, detachable arm

Right 90763511B
Left 90763512B

2 Crossbrace, pair: Includes center bolt and nut

16″W..... 907635C1B
18″W..... 907635C2B
20″W..... 907635C3B

3 Bottom inner rail kit: Includes bottom inner rail (2 each); screw and nut that hold bottom inner rail (4 each); and sleeve (2 each)

..... 90763503

4 Seat slide kit:

Single telescopic: Includes seat slide (2 each) and bushing (2 each)

16″ and 18″W 90763513

Double telescopic: Includes seat slide (2 each)

20″W..... 90763517

5 Grip (10 each) 90763005

6 Seat rail guide, rear (2 each) 90763015

7 Tipping sleeve (10 each)..... 90763006

8 Inner seat rail (2 each) 90763514

ARM, DETACHABLE

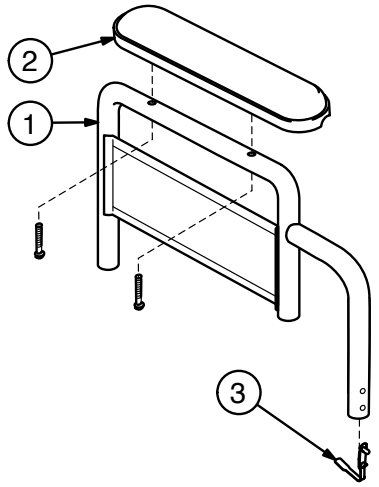

1 Arm, detachable fixed-height, pair: Includes right and left arm with side panel and spring lock (does not include arm pad)

Desk length..... 90763020B
Full length..... 90763021B

2 Arm pad, pair: Includes two black arm pads and mounting screws

Desk length..... 90763022B
Full length..... 90763023B

3 Spring lock (10 each)..... 90763024

CASTER

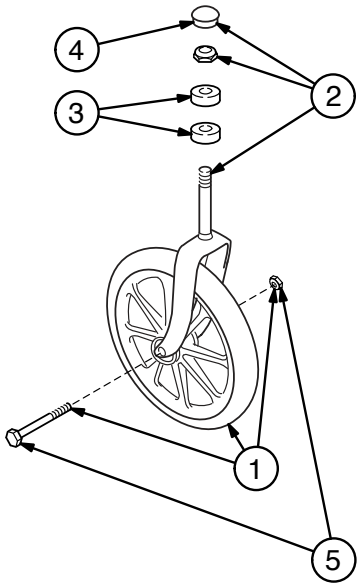

Complete caster (fork and wheel), 8″ x 1″ solid rubber tire..... 90763540

1 Caster wheel, axle and nut..... 90763541
2 Caster fork, stem nut and dust cap.... 90763542
3 Caster stem bearing (10 each)..... 90763543
4 Caster dust cap (10 each)..... 90763544
5 Caster axle and nut (10 each)..... 90763545

REAR WHEEL

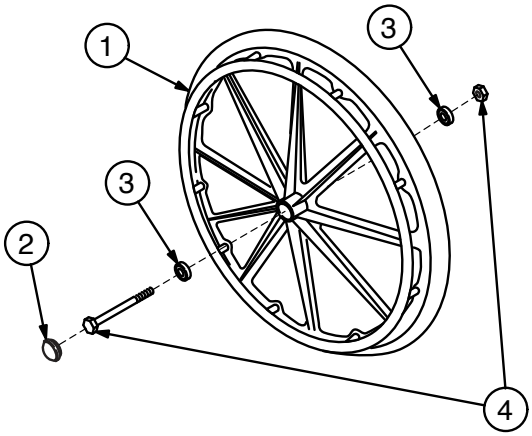

1 Rear wheel with handrim, 24″ x 1″, solid rubber tire: Includes hub cap and bearing; does not include axle or nut..... 90763550

2 Hub cap (10 each)..... 90763051

3 Wheel bearing (10 each)..... 90763552

4 Rear axle and nut (10 each)

Fixed-arm sideframe..... 90763553
Detachable-arm sideframe..... 90763554

FRONT RIGGING, DETACHABLE

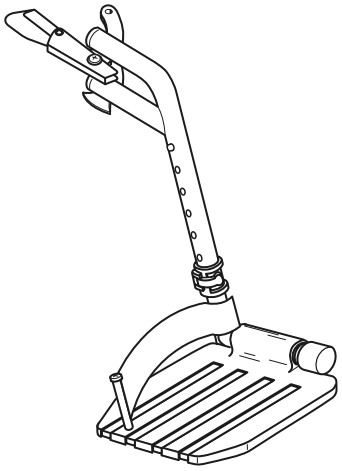

Footrest, pair, all widths
Includes right and left hanger with release and composite footplate with extension and heel loop 90763030B

Composite footplate, pair
(Fits all front rigging) 90763033B

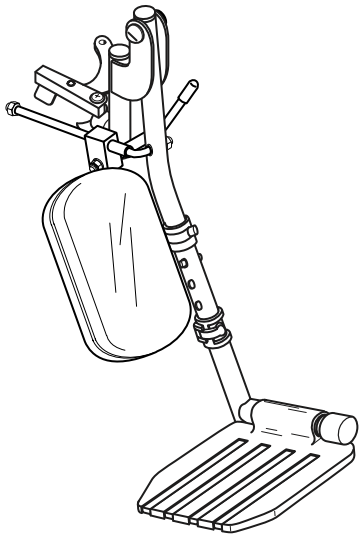

Low-pivot elevating legrest, pair, all widths
Includes right and left hanger with release, composite footplate with extension, and legrest panel (does not include heel loop) 90763031B

Elevating legrest panel kit
(Fits all elevating legrests)
Includes 2 black padded panels and hardware.....90763032B

UPHOLSTERY

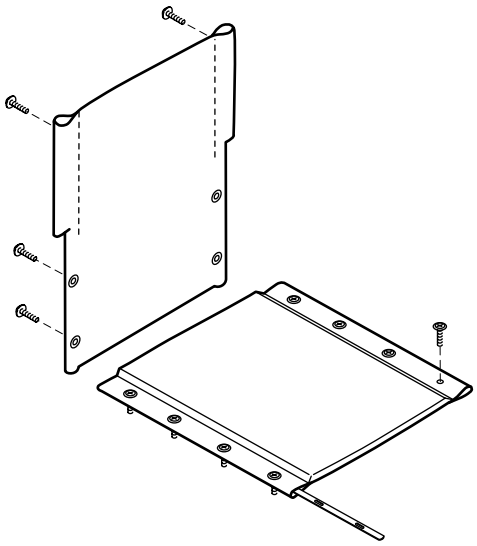

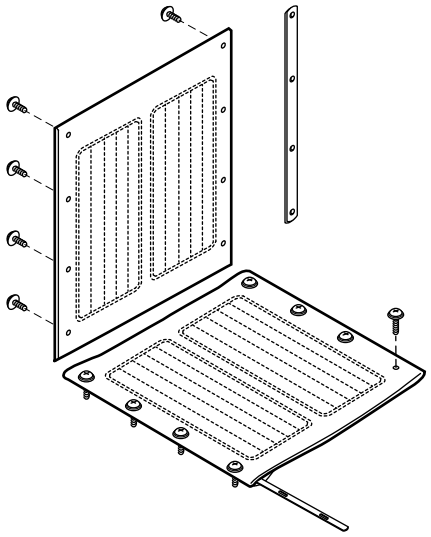

NYLON UPHOLSTERY

Back upholstery, black, with built-in chart holder: Includes hardware

Nylon, fixed arm, 16″ wide	907635D1B
Nylon, fixed arm, 18″ wide	907635D2B
Nylon, detachable arm, 16″ wide	907635A1B
Nylon, detachable arm, 18″ wide	907635A2B
Nylon, detachable arm, 20″ wide	907635A3B

Seat upholstery, black: Includes mounting strips and hardware

Nylon, 16″ wide	907635B1B
Nylon, 18″ wide	907635B2B
Nylon, 20″ wide	907635B3B

VINYL UPHOLSTERY

Back upholstery, black, with built-in chart holder: Includes hardware

Vinyl, fixed arm, 16″ wide	907635F1B
Vinyl, fixed arm, 18″ wide	907635F2B
Vinyl, detachable arm, 16″ wide	907635E1B
Vinyl, detachable arm, 18″ wide	907635E2B
Vinyl, detachable arm, 20″ wide	907635E3B

Seat upholstery, black: Includes mounting strips and hardware

Vinyl, 16″ wide	907635G1B
Vinyl, 18″ wide	907635G2B
Vinyl, 20″ wide	907635G3B

ACCESSORIES

Advantage LX accessories (not shown)

1 Heel loop, pair	90763064
2 Wheel lock, pair: Includes rubber tips	
Fixed-arm sideframe	
Push to lock	90763070
Pull to lock	90763071
Detachable-arm sideframe	
Push to lock	90763060
Pull to lock	90763061
3 Rubber tip, wheel lock (10 each)	90763063
4 Wheel lock extension, pair	90763062
5 Positioning belt (metal buckle)	92133040
6 Anti-Fold bar	92523850
7 O2-IV holder	B10320F
8 O2 cylinder holder	B10325
9 Anti-Tippers, pair:	
Fixed-arm sideframe	90763566
Detachable-arm sideframe	90763565