CLINIC BUNDLE B FLARED EDGE COATED POSITIONERS

PRODUCT INFORMATION

PHILLIPS SAFETY
PRODUCTS INC.

PRODUCT INFORMATION

CLINIC BUNDLE B FLARED EDGE COATED POSITIONERS

PPFP-KIT3

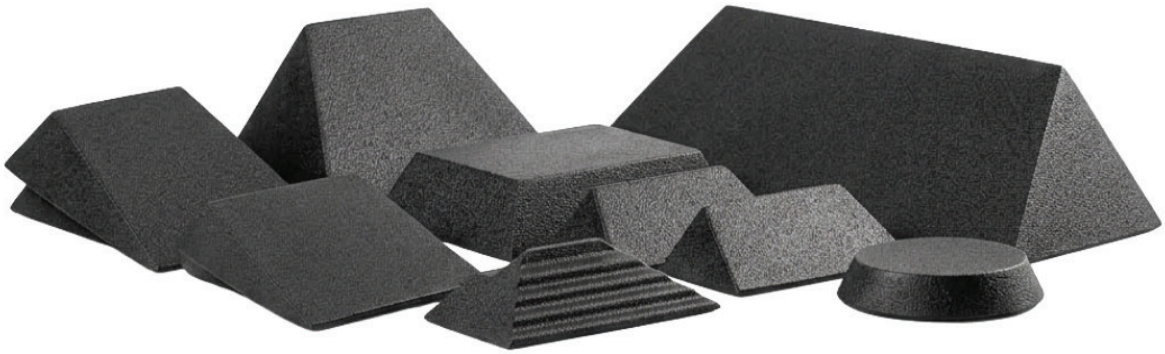

The Clinic Bundle B Flared Edge Coated Positioners is a kit that brings together a selection of foam positioners for patient support and positioning during medical imaging procedures. Designed for clinical imaging environments, it includes blocks, wedges, wedge sets, and a rectangle positioner for a range of positioning needs.

The Clinic Bundle B includes **one of each** of the following:

- PPFP-PCAA – Adult Finger Oblique Flared Edge Coated Block
- PPFP-PCAK – Circular Head Flared Edge Coated Block
- PPFP-PCBC – Small 45 Degree Spinal Flared Edge Coated Wedge
- PPFP-PCBD – Large 45 Degree Spinal Flared Edge Coated Wedge
- PPFP-PCBE – 34 Degree Flared Edge Coated Wedge Set
- PPFP-PCBI – 15 Degree Flared Edge Coated Wedge Set
- PPFP-PCBJ – 12 Degree Flared Edge Coated Wedge Set
- PPFP-PCBL – Small 3″ Flared Edge Coated Rectangle Positioner

For added durability, a medical-grade, fluid-resistant coating covers each foam positioner. The coating is easy to clean with medical-grade disinfectant wipes or sprays. It also helps protect the foam interior during repeated clinical use. In addition, the positioners are radiolucent, with low attenuation and minimal shadowing during imaging.

The patented N-VISI-RAY design features flared edges that help significantly reduce artifacts during X-ray imaging. Although the flared sides increase the overall size of the positioners, they do not affect imaging or positioning.

Finally, the positioners included in Clinic Bundle B are MRI Safe and latex-free. This makes the kit suitable for use across a variety of medical imaging environments.

SPECIFICATIONS

SHIPPING WEIGHT: 96 oz

SHIPPING DIMENSIONS: 28 × 16 × 12 in

MATERIAL: Coated Foam

POSITIONER TYPE: X-Ray Positioning Sets

FEATURES: Flared Edge, MRI Safe, Latex-Free, Radiolucent, Low Attenuation, Easy to Clean

PRODUCT INFORMATION

ADULT FINGER OBLIQUE FLARED EDGE COATED BLOCK

PPFP-PCAA

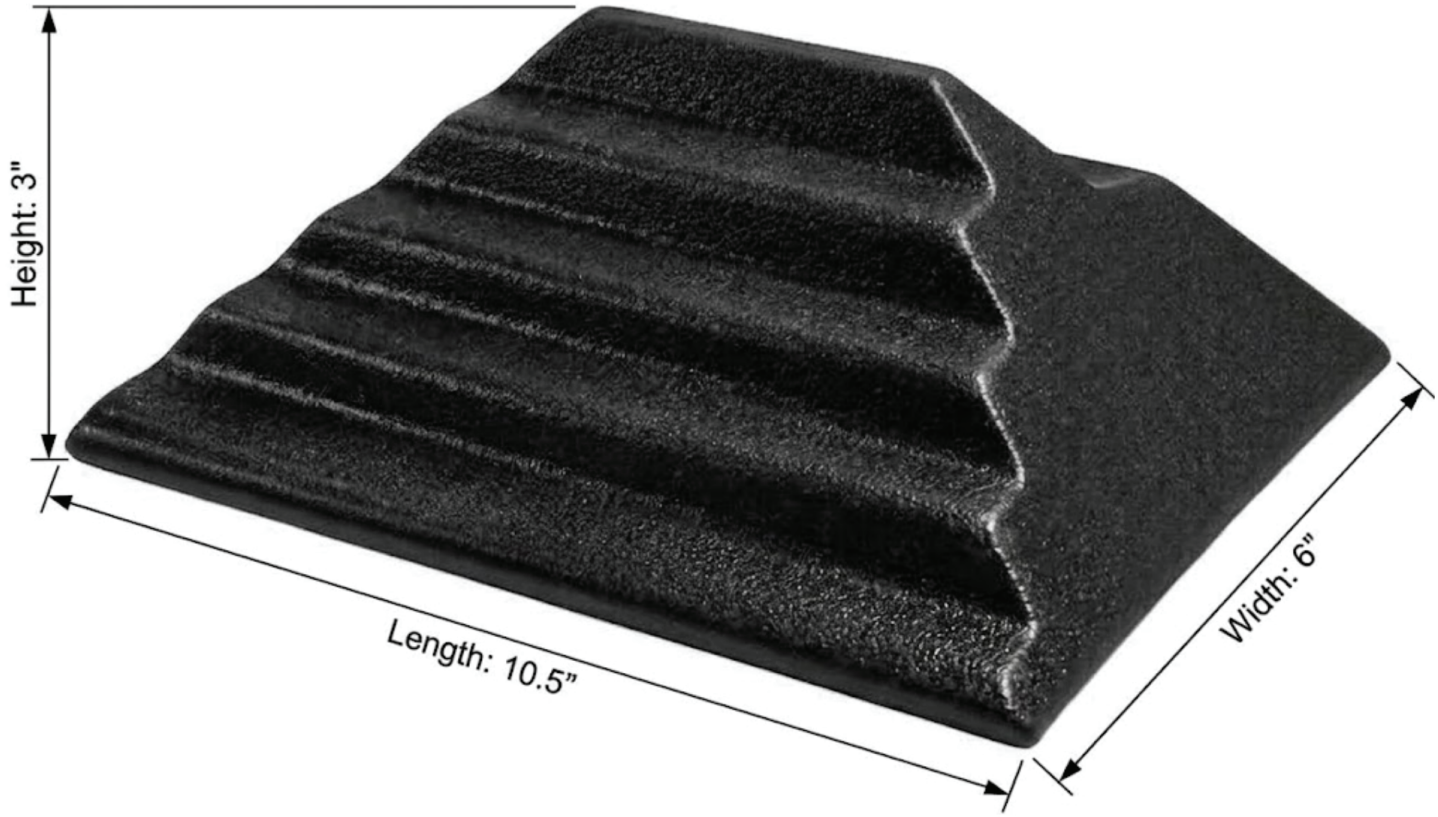

Date: 9/21/2026		**Drawing Title:** Adult Finger Oblique Flared Edge Coated Block
Scale: 1:1	**Unit:** Inches	**Drawing No:** PPFP-PCAA
		Notes: All dimensions are ± 0.1"

CIRCULAR HEAD FLARED EDGE COATED BLOCK

PPFP-PCAK

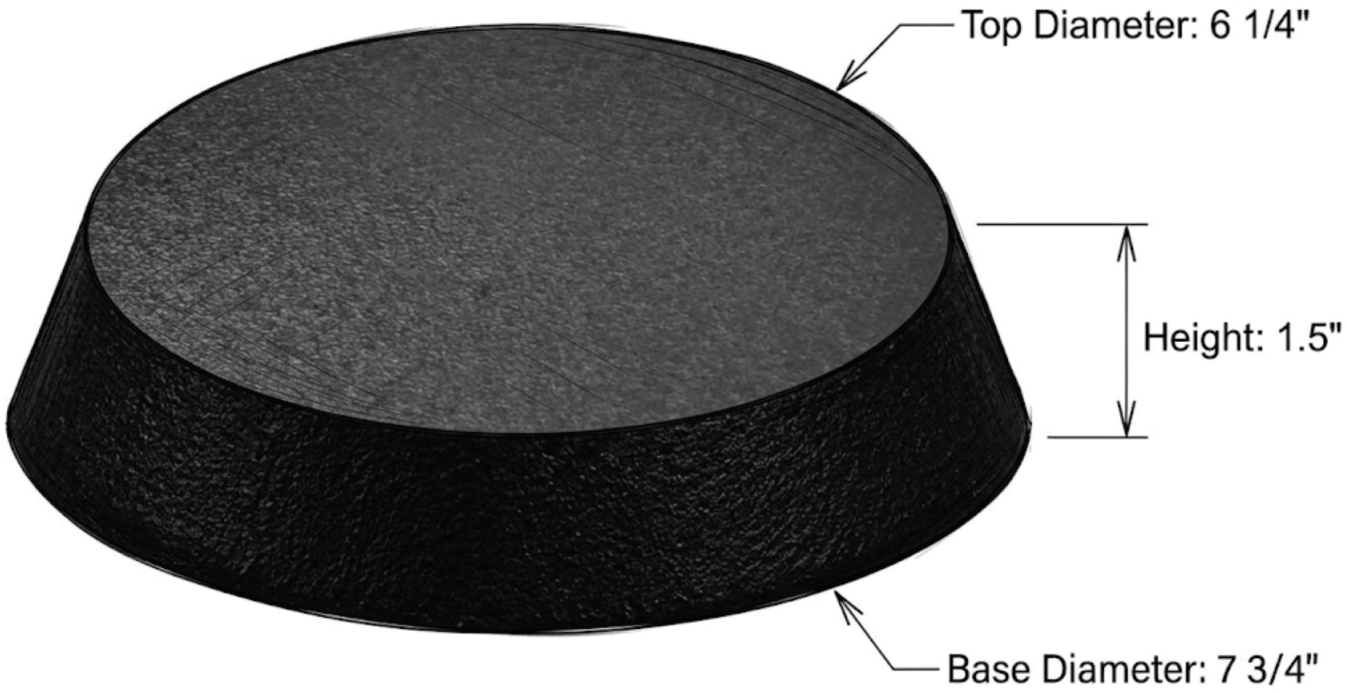

Date: 9/21/2026		**Drawing Title:** Circular Head Flared Edge Coated Block
Scale: 1:1	**Unit:** Inches	**Drawing No:** PPFP-PCAK
		Notes: All dimensions are ±0.1"

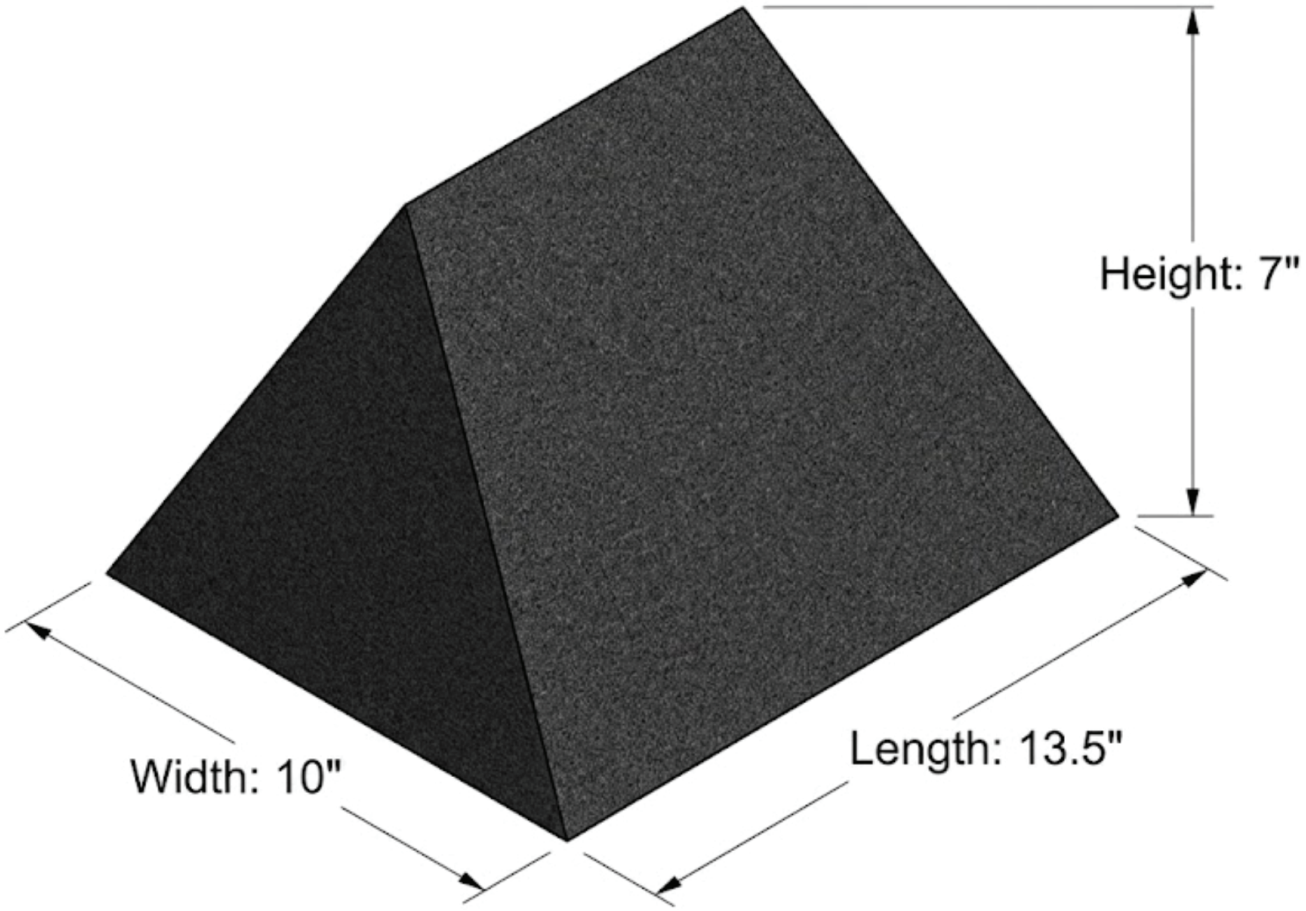

Date: 9/21/2026		**Drawing Title:** 45 Degree Spinal Flared Edge Coated Wedge
Scale: 1:1	**Unit:** Inches	**Drawing No:** PPFP-PCBC
		Notes: All dimensions are ± 0.1"

PRODUCT INFORMATION

LARGE 45 DEGREE SPINAL FLARED EDGE COATED WEDGE

PPFP-PCBD

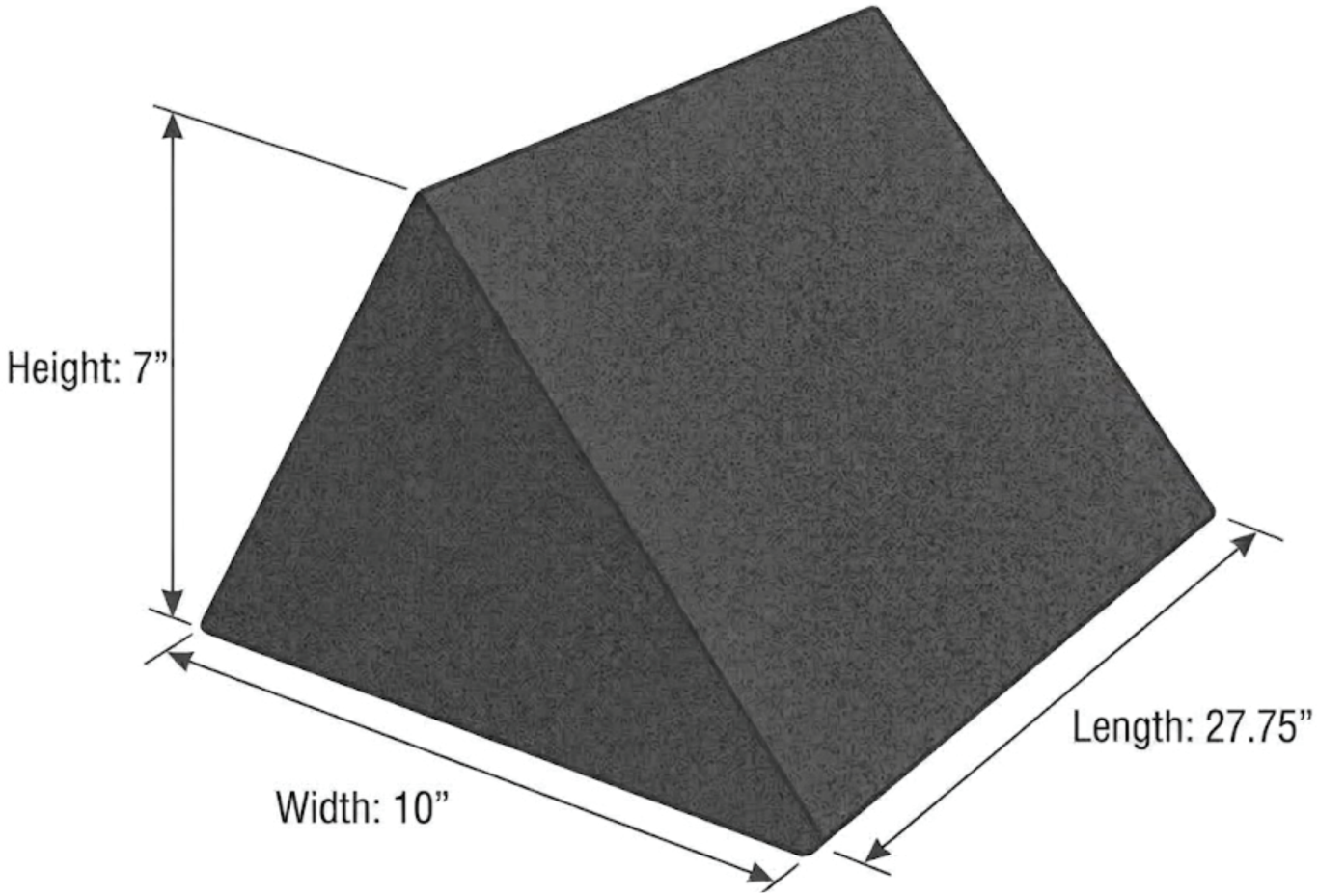

Date: 9/21/2026		**Drawing Title:** 45 Degree Spinal Flared Edge Coated Wedge
Scale: 1:1	**Unit:** Inches	**Drawing No:** PPFP-PCBD
		Notes: All dimensions are ± 0.1"

PRODUCT INFORMATION

34 DEGREE FLARED EDGE COATED WEDGE SET

PPFP-PCBE

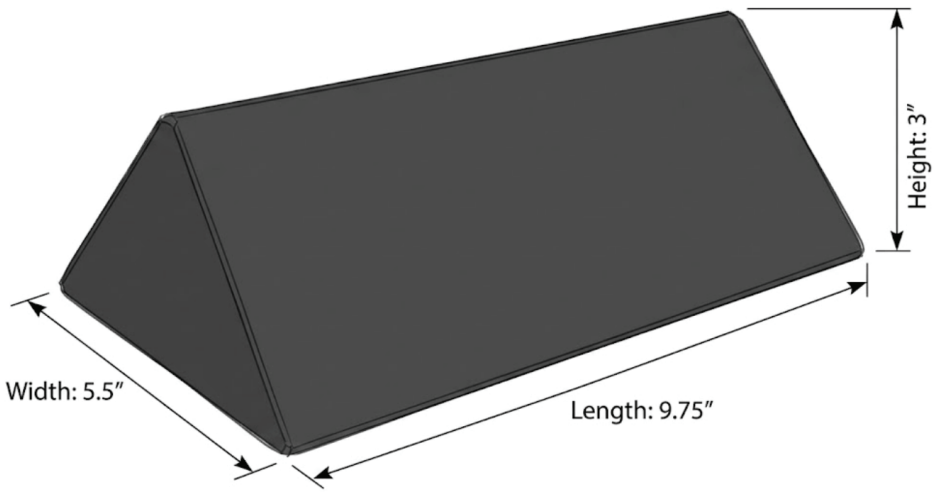

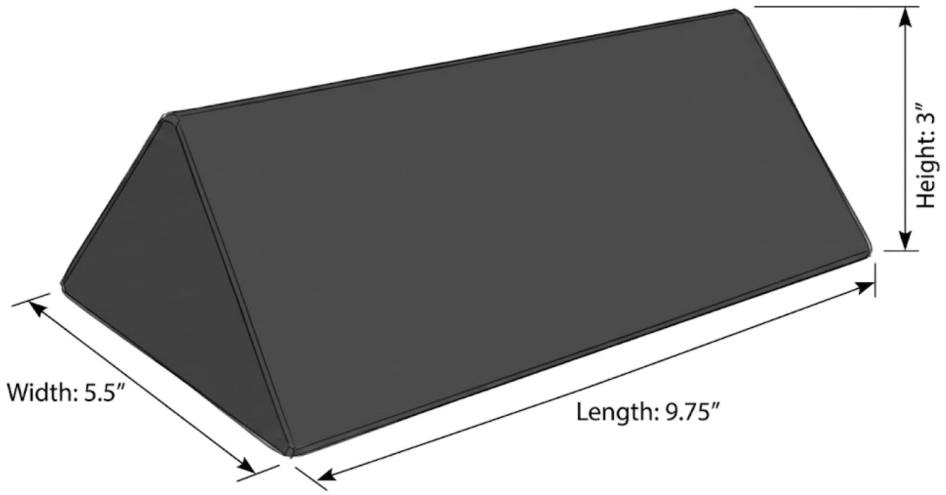

Date: 9/21/2026		**Drawing Title:** Flared Edge Coated Wedge Set
Scale: 1:1	**Unit:** Inches	**Drawing No:** PPFP-PCBE
		Notes: All dimensions are ±0.1"

PRODUCT INFORMATION

15 DEGREE FLARED EDGE COATED WEDGE SET

PPFP-PCBI

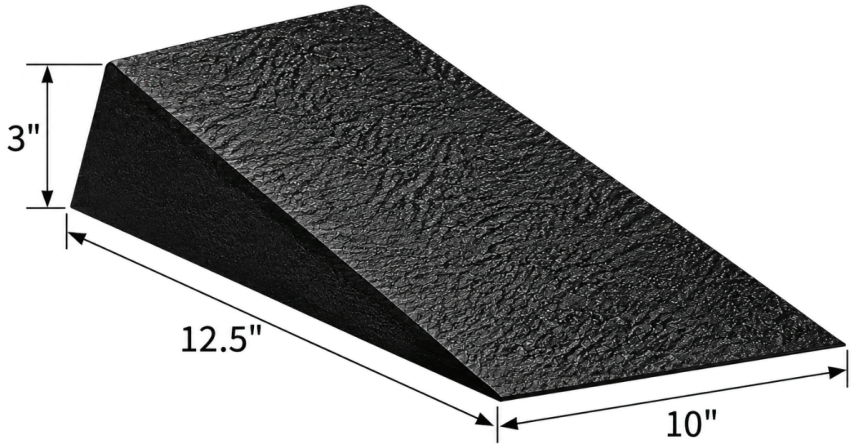

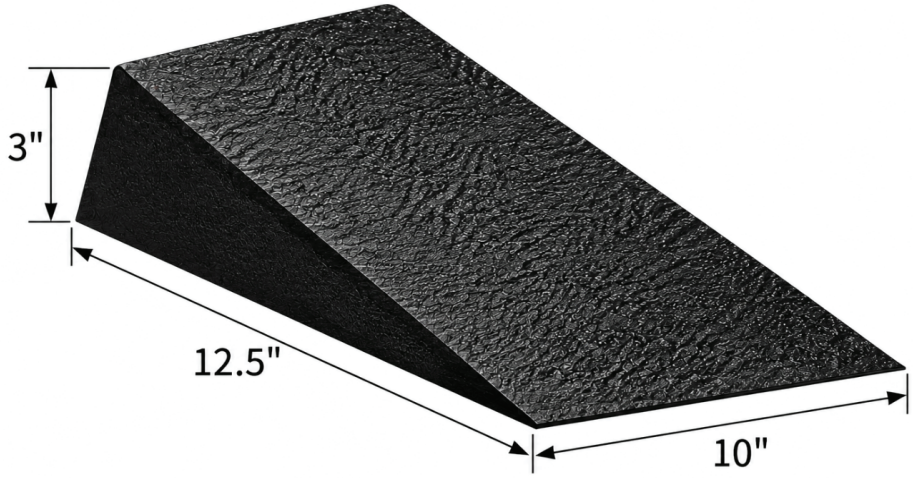

Date: 9/21/2026		**Drawing Title:** Flared Edge Coated Wedge Set
Scale: 1:1	**Unit:** Inches	**Drawing No:** PPFP-PCBI
		Notes: All dimensions are ±0.1"

PRODUCT INFORMATION

12 DEGREE FLARED EDGE COATED WEDGE SET

PPFP-PCBJ

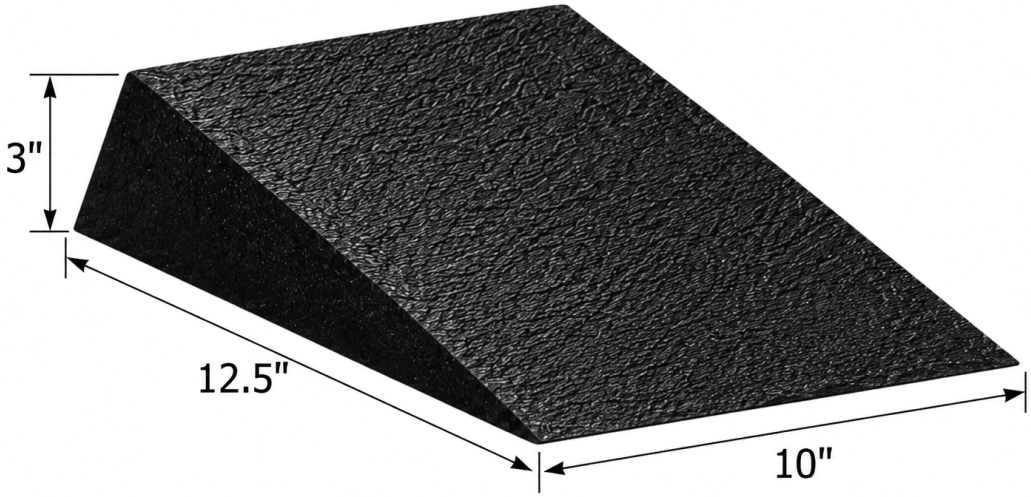

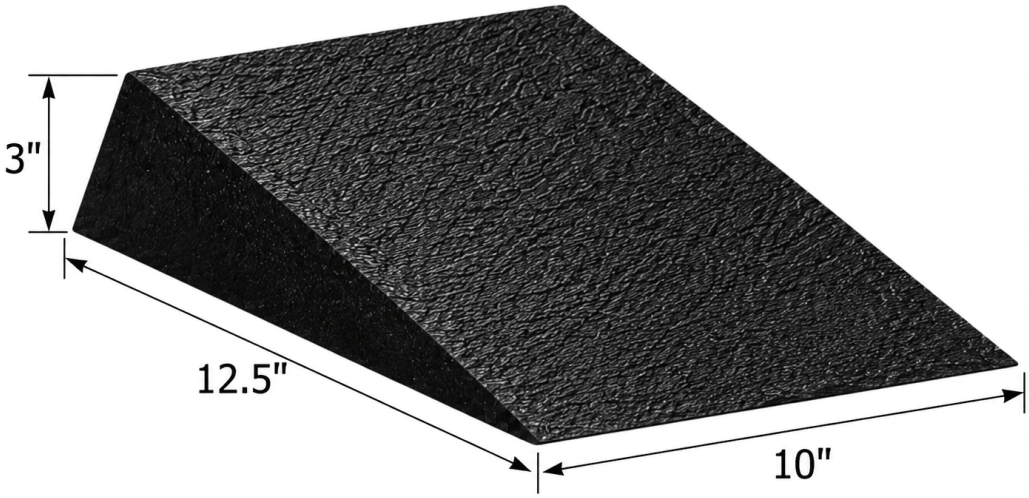

Date: 9/21/2026		**Drawing Title:** Flared Edge Coated Wedge Set
Scale: 1:1	**Unit:** Inches	**Drawing No:** PPFP-PCBJ
		Notes: All dimensions are ±0.1"

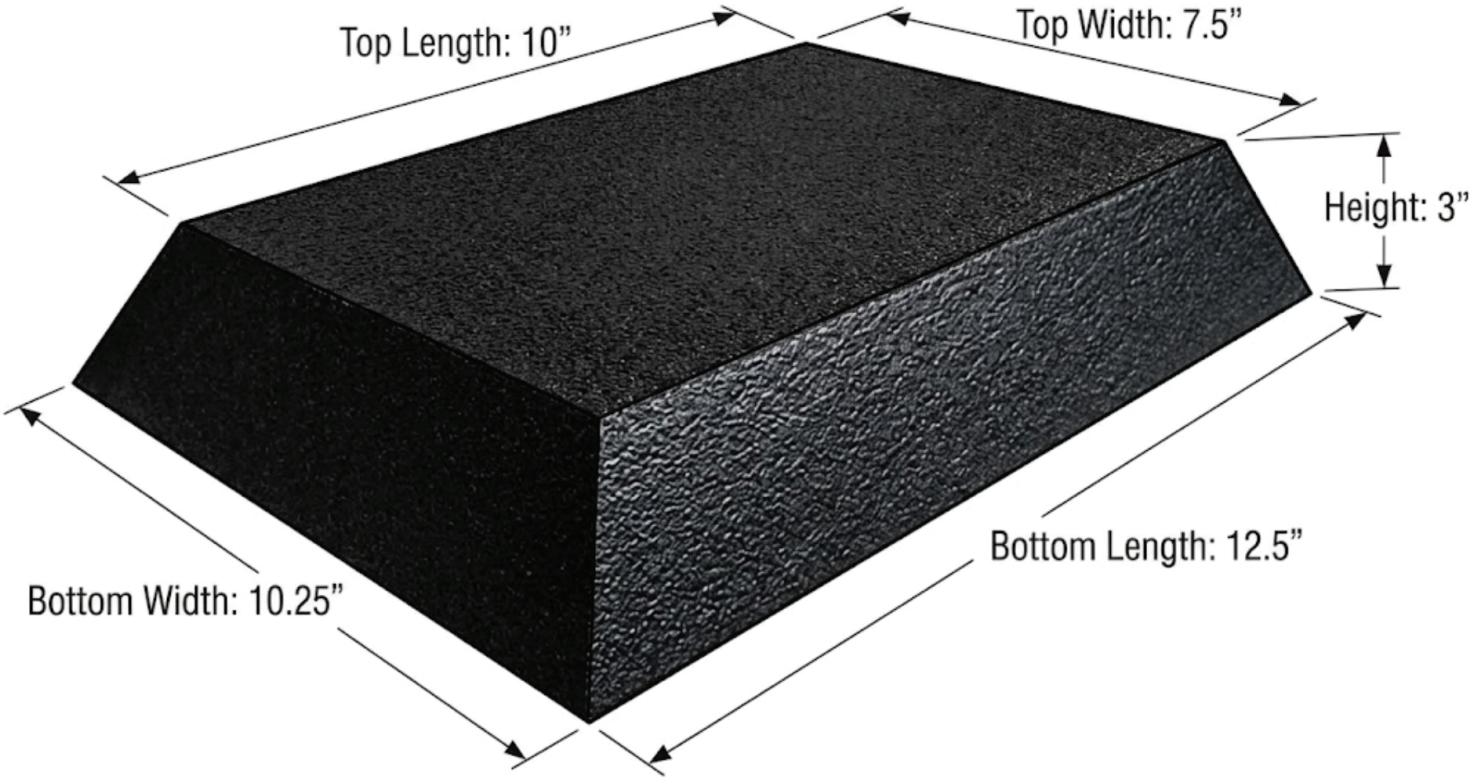

Date: 9/21/2026		**Drawing Title:** 3" Flared Edge Coated Rectangle Positioner
Scale: 1:1	**Unit:** Inches	**Drawing No:** PPFP-PCBL
		Notes: All dimensions are ±0.1"