LUMEX®
by graham-field

Series FR565WG Deluxe Preferred Care Recliner Extra Wide

Assembly and Operating Instructions

IMPORTANT: READ THIS MANUAL BEFORE OPERATING YOUR LUMEX FR565WG DELUXE EXTRA WIDE PREFERRED CARE RECLINER.

SAVE THIS MANUAL FOR FUTURE USE.

LX_FR565WG-INS-LAB-RevH21

CONTENTS

INTRODUCTION 3
INTENDED USE 3
IMPORTANT SAFETY PRECAUTIONS—READ BEFORE USE 4
WARNINGS 4
ASSEMBLY 5
UNPACKING INSTRUCTIONS 5
UPHOLSTERED BACK ASSEMBLY 6
OPERATION 7
TENTE® CASTER OPERATION 7
RECLINER OPERATION 8
OPERATION OF THE RECLINE MECHANISM 8
OPERATION OF THE POSITION LOCKING MECHANISM 8
RECLINER POSITIONING MECHANISM TROUBLESHOOTING GUIDE 9
ADJUSTMENT INSTRUCTIONS FOR POSITIONING LOCKING MECHANISM 9
UPHOLSTERY REMOVAL AND REPLACEMENT 10
BACK CUSHION 10
SEAT-LEG CUSHION 10
ARM PANELS 10
CARE AND MAINTENANCE 11
EVERY THREE MONTHS 11
UPHOLSTERY MAINTENANCE AND STAIN REMOVAL 11
PERMABLOK3® CARE AND CLEANING GUIDE — ADVANCED VINYL PROTECTION 11
CDC RECOMMENDATIONS 12
TECHNICAL SPECIFICATIONS 14
ACCESSORIES 15
DISPOSAL AND KEY TO SYMBOLS 16
DISPOSAL 16
KEY TO SYMBOLS 16
LIMITED WARRANTY 17
INDEX 19

INTRODUCTION

This manual contains assembly, operation, and maintenance instructions for Lumex Deluxe Extra Wide Preferred Care Recliners Series FR565WG. Read the entire manual carefully before using your recliner, and refer to it during use if you have questions.

INTENDED USE

Lumex Preferred Care Recliners are intended to make the care, treatment and recovery of patients easier and more comfortable. Lumex Preferred Care Recliners are used in a wide range of healthcare applications including Dialysis, Oncology, Long Term Care, Patient Room Seating, Same Day Surgery and Post-Operative Recovery. Lumex Preferred Care Recliners are ideal for use in hospitals, clinics and in extended care settings.

Lumex Series FR565WG supports patient weights up to 400 lb (181.4 kg), EVENLY DISTRIBUTED.

IMPORTANT SAFETY PRECAUTIONS—READ BEFORE USE

The safety statements presented in this chapter refer to the basic safety information that the FR565WG user shall pay attention to and abide by. There are additional safety statements in other chapters or sections, which may be the same as or similar to the following, or specific to the operations. Please note the following special statements, used throughout this manual, and their significance:

⚠ **WARNING: Indicates a potential hazard situation or unsafe practice that, if not avoided, could result in death or serious personal injury.**

⚠ **CAUTION: Indicates a potential hazard or unsafe practice that, if not avoided, could result in minor or moderate personal injury.**

▲ **NOTICE: Indicates a potential hazard or unsafe practice that, if not avoided, could result in product or property damage.**

Info: Provides application recommendations or other useful information to ensure that you get the most from your product.

WARNINGS

⚠ **WARNING: Read this entire manual before assembly or operation.**

⚠ **WARNING: Periodically inspect all parts and replace as needed.**

⚠ **WARNING: Do not use near an open flame, as the chair could be a combustion source, resulting in fire, property damage, and severe personal injury.**

⚠ **WARNING: Service and repair of the Lumex FR565WG Preferred Care Recliner must be performed by an authorized Lumex distributor. GF Health Products, Inc. is not responsible for any consequence resulting from any unauthorized service or repair.**

⚠ **WARNING: This product has a maximum weight capacity of 400 lb (181.4 kg), EVENLY DISTRIBUTED.**

⚠ **WARNING: Casters must be locked at all times, except during transport.**

⚠ **WARNING: Unauthorized modification of your recliner or the use of non-Lumex replacement parts may change the structure of the recliner and could create a hazardous condition, which may result in serious injury and will void the warranty.**

⚠ **WARNING: This product can expose you to chemicals including Di(2-ethylhexyl)phthalate (DEHP) which is known to the State of California to cause cancer and birth defects or other reproductive harm. For more information go to www.p65warnings.ca.gov/furniture.**

⚠ **WARNING: GF Health Products, Inc. specifically disclaims responsibility for any bodily injury or property damage which may occur during any use which does not comply with federal, state or local laws or ordinances.**

ASSEMBLY

UNPACKING INSTRUCTIONS

1. Refer to illustration below.
2. Unpack and inspect contents for shipping damage or missing parts. If parts are damaged or missing, contact your Graham-Field distributor immediately. The contents of this package should be:
   a. One Recliner frame with upholstered seat
   b. One upholstered back
   c. Two clevis pins with ring cotter pins
3. DO NOT remove the wooden shipping support that is attached to the recliner's upholstered back until after the recliner's upholstered back has been assembled to the chair.
4. Save this booklet in a safe place for future reference.

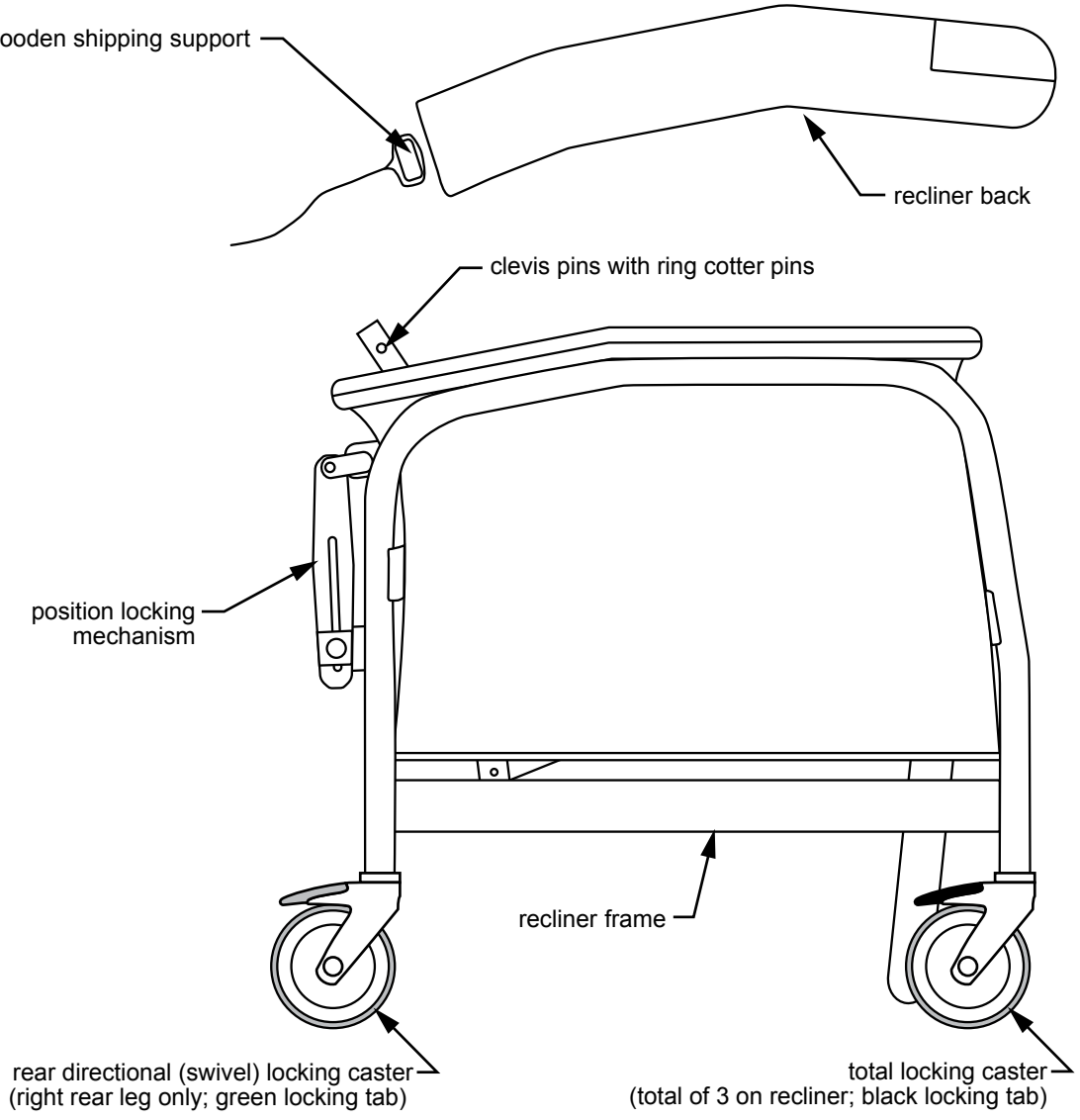

Unpacking

Upholstered Back Assembly

Info: To facilitate assembly, DO NOT remove the wooden shipping support that is attached to the recliner's metal back frame until after the recliner's metal back frame has been assembled to the recliner frame.

1. Refer to illustrations at right.
2. Locate the upholstered back assembly. Remove the upholstered cushion from the metal back frame.
3. Remove the clevis pins and ring cotter pins from back frame (one on each side).
4. Slide the back tubes onto the receiving tubes on recliner frame and tap down until holes in back frame line up with holes in the recliner frame.
5. Replace clevis pins and ring cotter pins. Remove the wooden shipping support and discard.
6. Slide the lower elastic band on back frame downward to cover the clevis pins. Position other straps evenly on back frame.

Info: The 2" elastic bands can be adjusted for custom patient comfort. By repositioning the bands you can increase or decrease the amount of support anywhere along the back.

7. At the bottom of the upholstered back cushion you will find two elastic straps with key rings on the ends (one on each side). Replace back cushion over metal back frame and secure to the recliner frame with the rings attached to the elastic straps. Hook the rings over the buttons on the recliner frame.

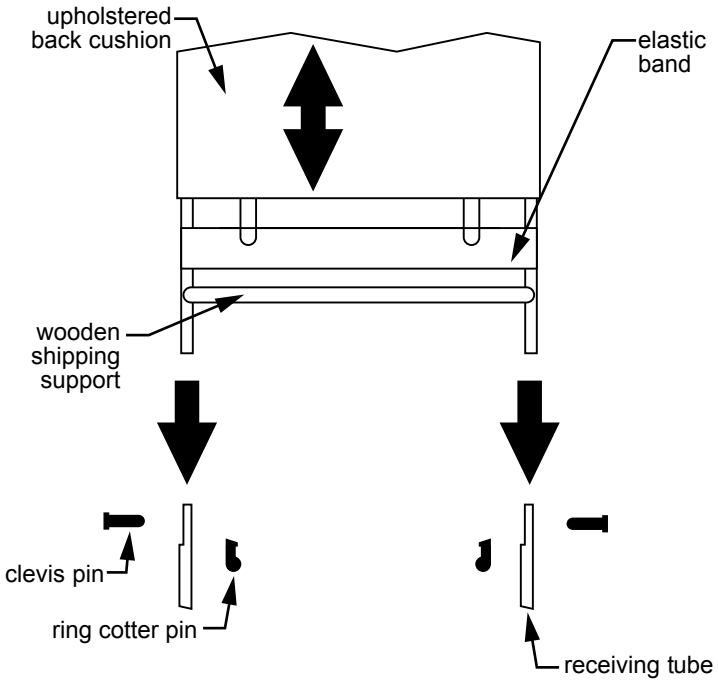

Back Assembly 1

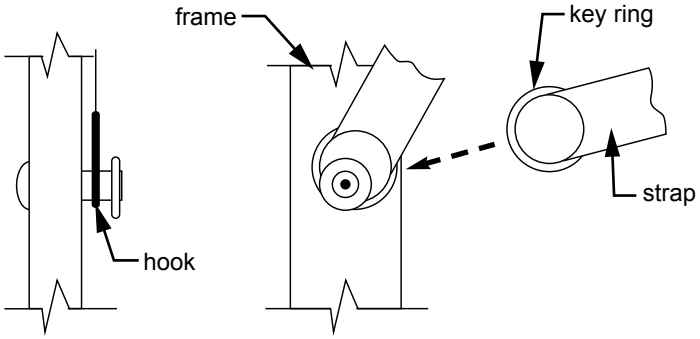

Back Assembly 2

Back Assembly 3

OPERATION

TENTE® CASTER OPERATION

⚠ **WARNING: Casters must be locked at all times, except during transport.**

All Lumex Preferred Care Recliners now feature the latest design, all-plastic casters from TENTE. Specifically designed for use in healthcare environments, the new casters are easier to clean, easier to move, and tolerate a wide array of cleaners and chemicals. Each caster is made from high-grade synthetic materials and features a double-ballbearing swivel head. The wheel center is made of polypropylene and the tire tread of TENTEprene (thermoplastic rubber). The gray non-marking tires feature precision ball bearings.

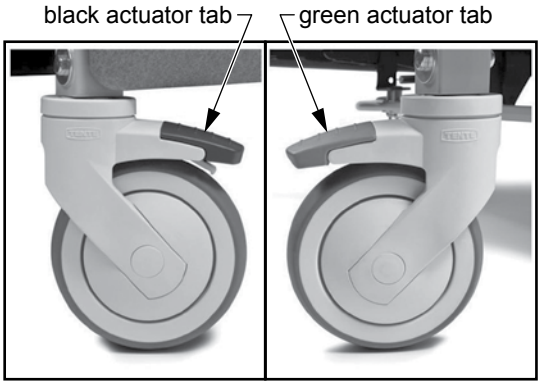

Total Locking Caster | **Directional (Swivel) Locking Caster (Right Rear Caster)**

Locking casters: Each Lumex Preferred Care Recliner features three total locking casters, identified by black actuator tabs, that lock both the wheel and the swivel. To activate the total lock, simply press down on the BLACK actuator tab until it locks. To release the total lock, press on the raised portion of the actuator tab until the lever is back in the normal operating position.

Directional (swivel) caster: The fourth caster, located on the right rear position of the recliner, is a directional (swivel) locking caster only. Identified by a green actuator tab, the directional lock caster will lock in one of two 180-degree positions relative to the frame (forward and backward) and allows the recliner to track straight when pushed. To activate the directional lock, simply press down on the GREEN actuator tab until it locks — you may need to move the recliner slightly until the caster locks in a straight line with the recliner frame. To release the directional lock, press on the raised portion of the actuator tab until the lever is back in the normal operating position.

RECLINER OPERATION

The Lumex Series FR565WG Preferred Care Recliners feature an infinite position mechanism, meaning there are no stops as are found on traditional recliner mechanisms. In addition, there is a caregiver position lock handle located on the back of the recliner that allows the caregiver to lock the recliner in any position as well as to adjust the tension on the reclining mechanism. **This lock can only be activated by the caregiver. It is not a patient activated feature.**

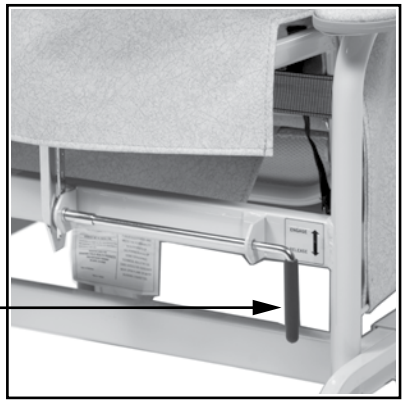

Position Lock Handle

Operation of the Recline Mechanism

- **By the patient:** Place hands on armrest and push body against recliner's back to recline yourself to desired position. To bring yourself up, place hands on armrest and pull yourself up while leaning your body forward away from the recliner back while at the same time pushing down evenly on the footrest with your legs.
- **Reclining by attendant:** Standing on either side of the recliner, grasp the armrest with one hand and push back on the recliner's back until desired recliner position is achieved. To return, grasp recliner back and pull forward to raise the recliner's back. If desired, engage the position locking mechanism.

Semi Recline

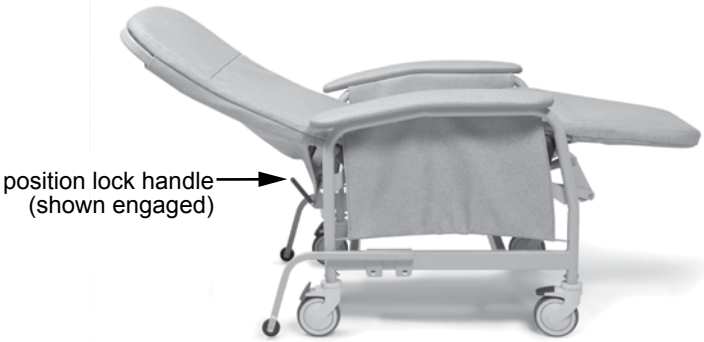

Full Recline

Operation of the Position Locking Mechanism

⚠ **WARNING: Before engaging position lock handle, be sure to lock all casters.**

1. To hold the recliner in any position, rotate the position lock handle so that it points upward.
2. To release the position mechanism, rotate the position lock handle so that it points downward.

Info: The position mechanism is factory set. If the position mechanism does not hold, follow the Adjustment Instructions for Positioning Locking Mechanism on the next page. The plate has 5 position marks for repeatable positions (see picture on next page).

RECLINER POSITIONING MECHANISM TROUBLESHOOTING GUIDE

Adjustment Instructions for Positioning Locking Mechanism

⚠ **WARNING: DO NOT lubricate the position mechanism assembly. The recliner could fail to lock in position and cause severe personal injury.**

1. Refer to illustration at right.
2. Turn the position lock adjustment handle downward to the release position. Remove the top clevis pin by removing the ring cotter pin and sliding the clevis pin out of the mechanism.
3. Slide the positioning plate upward so that you can turn the square washer clockwise until it is snug again.
4. Slide the positioning plate down over the square washer and put the clevis pin in but do not put the ring cotter pin in. Rotate the position lock adjustment handle upward to ensure that the correct tension is on the position lock. If the position lock handle is still too loose, remove the clevis pin again and repeat Step 2 above. Once the proper amount of tension is on the position lock handle, slide the positioning plate down over the square washer and put the clevis pin back into place and secure with the ring cotter pin.
5. The position lock adjustment handle should engage at about the halfway point.

⚠ **WARNING: Before use, ensure that clevis pin and ring cotter pin are secure.**

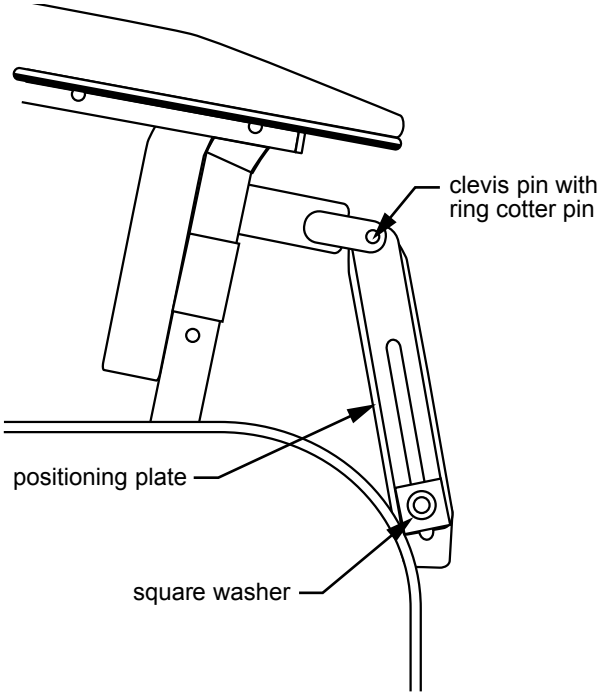

Recliner Positioning Mechanism Troubleshooting

UPHOLSTERY REMOVAL AND REPLACEMENT

Back Cushion

Refer to illustration at right.

To Remove: Release the two rings mounted on the elastic straps from the buttons mounted on either side of the recliner frame which hold the back cushion to the back frame. Grip the top of the back cushion near the back frame handgrips and slide up and off the back frame.

To Replace: Reverse the above procedure and make sure to hook the strap rings to the buttons mounted on either side of the recliner frame to secure the back cushion.

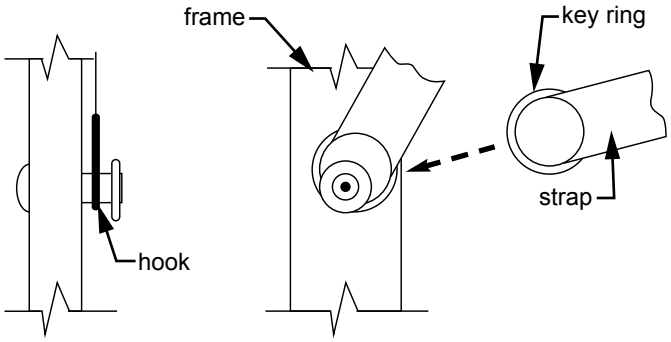

Back Cushion Removal and Replacement
Seat-Leg Cushion Removal and Replacement

Seat-Leg Cushion

Refer to illustration above.

To Remove: Release the two rings mounted on the elastic straps from the buttons that hold the seat-leg cushion to the recliner frame. Adjust the recliner into the semi-recline position. Flip the seat section of the seat-leg cushion forward and release the two hooks that hold the seat-leg cushion to the legrest frame. Slide the seat-leg cushion downward and forward and remove it from the recliner frame.

To Replace: Reverse the above procedure. Make sure to re-hook the seat section of the seat-leg cushion to the recliner frame with the two hooks. Once the seat section is flipped down onto the frame, be sure to hook the strap rings to the buttons mounted on either side of the recliner frame to secure the seat-leg cushion.

Arm Panels

Refer to illustration at right.

To Remove: Grip the steel rod at the bottom of the side panel near the front of the side frame. Gently slide the rod backward while flexing the rod slightly until it disengages from the hole in the frame that secures the rod in place. Detach the four screws from under the side frame arm plate.

To Replace: Reverse procedure.

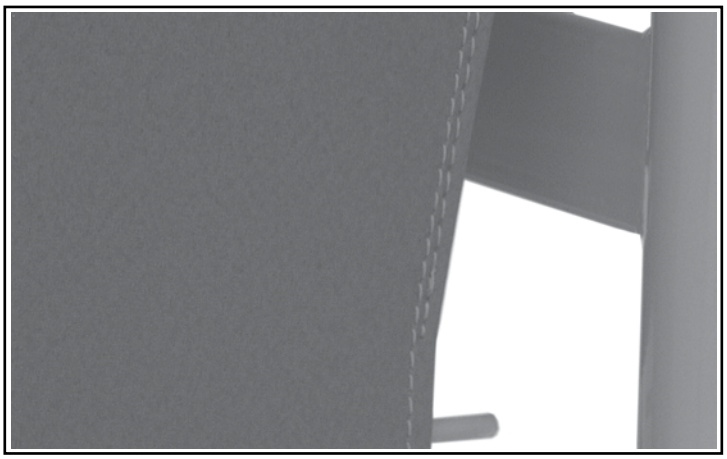

Arm Panel Removal and Replacement

CARE AND MAINTENANCE

⚠ **WARNING: Inspect all components periodically and replace as needed.**

EVERY THREE MONTHS

- Check and clean casters.
- Tighten bolts in each leg that secure caster into frame.
- Check brakes on casters.
- Check and clean lock recline mechanism.
- Check recliner mechanism for operation in all positions, including Trendelenburg Position, with assistant seated in recliner.

UPHOLSTERY MAINTENANCE AND STAIN REMOVAL

- Ordinary dirt: wash with warm water and a mild soap or detergent.
- Stubborn dirt: using a soft bristle brush, wash with warm water and a mild soap or detergent.
- Ground-in dirt: scrub with powdered cleanser or similar detergent.
- Chewing gum: scrape carefully; remove with kerosene or naphtha.
- Nail polish and remover: Blot immediately to prevent damage.
- Ball point pen: blot immediately with a white cloth dampened in water or mineral oil.
- Paint, shoe polish, heel marks: remove immediately! Use a white cloth dampened in kerosene, naphtha or turpentine. Do not use paint remover or liquid brush cleaners.
- Tars, asphalt, creosote: remove to prevent staining. Clean area with kerosene or naphtha.

⚠ **WARNING: When using kerosene or naphtha, do so in a well ventilated area and keep away from fire and flame.**

- Waxing and refinishing: improves wearability. Use any quality paste wax.
- A diluted solution of 10% (or less) of bleach or Clorox may be used when cleaning this recliner.

PERMABLOK3® Care and Cleaning Guide — Advanced Vinyl Protection

- Step 1 (eye shadow, mascara, grease, black felt tip pen, crayon, chocolate, suntan lotion, hair and body oils): remove excess spill with a damp cloth. Clean with a 1:1 mix of Ivory® liquid soap and water. Next, rinse with clean water and dry.
- Step 2 (red lipstick): use a straight application of concentrated cleaners such as Formula 409® or Fantastik® spray cleaner. Wipe with a clean cloth, rinse with water, and dry.
- Step 3 (blood, urine, feces, oil base paint, tar, and asphalt): use a 1:1 mix of ammonia and water, or a 1:4 mix of bleach and water. Rinse with clean water and dry.
- Step 4 (all other tough stains): use a straight application of naphtha (lighter fluid). Rinse thoroughly with clean water and pat surface dry. If the stain persists, go to step 5.
- Step 5: use a 1:1 mix of isopropyl alcohol and water. If the stain persists, use straight alcohol. Rinse thoroughly with clean water and pat dry.

Info: For cleaning that requires step 4 or 5, use a soft cotton cloth saturated with the cleaning material and rub the stain in circles 10 times. Pat dry with another soft cotton cloth and check the results.

The information published in this care guide refers to the performance of PERMABLOK3 products in specific tests conducted under laboratory conditions. Results may vary under actual conditions.

This information is not a guarantee and does not relieve the user from the responsibility of the proper and safe use of the product and all cleaning agents. The use of certain agents can be harmful to the surface appearance and lifespan of vinyl. Spradling, its agents, and assigns assume no responsibility resulting from the use of such cleaning agents to the vinyl.

Please check compatibility when using this product in combination with painted or varnished surfaces.

PERMABLOK3 is a registered trademark of Spradling Holdings, Inc.
Ivory is a registered trademark of Procter and Gamble.
Formula 409 is a registered trademark of The Clorox Company.
Fantastik is a registered trademark of S.C. Johnson & Son, Inc.

Spradling International is not sponsored by, affiliated with, or endorsed by such trademark owners.

CDC RECOMMENDATIONS

CLEANING AND DISINFECTING STRATEGIES FOR ENVIRONMENTAL SURFACES IN PATIENT-CARE AREAS FOR VINYL UPHOLSTERY, WALL COVERINGS AND FLOORING

- Select EPA-registered disinfectants, if available, and use them in accordance with the manufacturer's instructions.
- Do not use high-level disinfectants/liquid chemical sterilants for disinfection of either noncritical instruments and devices or any environmental surfaces; such use is counter to label instructions for these toxic chemicals.
- Follow manufacturers' instructions for cleaning and maintaining noncritical medical equipment.
- In the absence of a manufacturer's cleaning instructions, follow certain procedures:
  - Clean noncritical medical equipment surfaces with a detergent/disinfectant.
  - Do not use alcohol to disinfect large environmental surfaces.
  - Use barrier protective coverings as appropriate for noncritical surfaces that are:
    - Touched frequently with gloved hands during the delivery of patient care.
    - Likely to become contaminated with blood or body substances.
    - Difficult to clean (e.g., computer keyboards).
- Keep housekeeping surfaces (e.g., floors, walls, tabletops) visibly clean on a regular basis and clean up spills promptly.
- Use a one-step process and an EPA-registered hospital detergent/disinfectant designed for general housekeeping purposes in patient-care areas where:
  - Uncertainty exists as to the nature of the soil on the surfaces (whether it is blood or body fluid or just normal dust or dirt).
  - Uncertainty exists regarding the presence of multi drug resistant organisms on such surfaces.
- Detergent and water are adequate for cleaning surfaces in nonpatient-care areas (e.g., administrative offices). Clean and disinfect high-touch surfaces on a more frequent schedule

than minimal-touch housekeeping surfaces. Clean walls, blinds, and window curtains in patient-care areas when they are visibly dusty or soiled.

- Do not perform disinfectant fogging in patient-care areas.
- Avoid large-surface cleaning methods that produce mists or aerosols, or disperse dust in patient-care areas.
- Follow proper procedures for effective uses of mops, cloths, and solutions.
  - Prepare cleaning solutions daily or as needed, and replace with fresh solution frequently according to facility policies and procedures.
  - Change the mop head at the beginning of each day and also as required by facility policy, or after cleaning up large spills of blood or other body substances.
  - Clean mops and cloths after use and allow to dry before reuse; or use single-use, disposable mop heads and cloths.
- When performing low- or intermediate-level disinfection of environmental surfaces in nurseries and neonatal units, avoid unnecessary exposure of neonates to disinfectant residues on these surfaces by using EPA-registered germicides in accordance with manufacturers' instructions and safety advisories.

TECHNICAL SPECIFICATIONS

Specification	Model FR565WG
Overall Height	48" (121.9 cm)
Overall Width	32" (83.1 cm)
Overall Depth	37" (94.0 cm)
Width Between Arms	24" (61.0 cm)
Arm Height from Floor	28" (71.1 cm)
Arm Height from Seat	8 1/2" (21.6 cm)
Seat Height	20" (50.8 cm)
Seat Width	24" (61.0 cm)
Seat Depth	19 1/2" (49.5 cm)
Shipping Weight	91 lb (41.3 kg)
Maximum Weight Capacity	400 lb (181.4 kg), EVENLY DISTRIBUTED

For complete technical specifications, please call the Graham-Field Technical Support Group at 1.770.368.4700.

ACCESSORIES

For your convenience, Graham-Field / Lumex offers the following accessories that may be purchased from your Graham-Field / Lumex Distributor.

Item	Description
56461	Head Bolster
56462	Head Bolster
56471	Body Bolster
5645G	Drainage Bag Holder
5782G	IV Pole Holder
2100A/2101A	IV Pole
LX5640G	Footplate Set
5657G	Foot Drop Device
5644G	Activity Tray Table
5644WG	Activity Tray Table

DISPOSAL AND KEY TO SYMBOLS

DISPOSAL

Lumex Recliner equipment and accessories can be disposed of.

We recommend disassembling and dividing the equipment and components into different waste groups such as: metal, cable, electronic, recoverable resource and plastic for recycling or combustion.

Most plastic components are provided with a plastic types code and fiber content to aid sorting of plastic parts.

Product	Metal Scrap	Cable Scrap	Electronic Scrap	Plastic Recycling or Combustion
FR565WG	X	X	N/A	X

KEY TO SYMBOLS

The following symbols are used on Lumex Recliner product labels.

	MANUFACTURER
	FRAGILE, HANDLE WITH CARE
CE	CE MARK
	CAUTION
EC REP	EUROPEAN AUTHORIZED REPRESENTATIVE
UDI	UNIQUE DEVICE IDENTIFIER

	GENERAL WARNING SIGN
	KEEP DRY
	ELECTRICAL AND ELECTRONIC EQUIPMENT
	CONSULT INSTRUCTIONS FOR USE
MD	MEDICAL DEVICE

LIMITED WARRANTY

SCOPE OF WARRANTY

GF Health Products, Inc. (“GF”) warrants to the original purchaser only that it will replace or repair components, at GF’s sole discretion, that are defective in material or workmanship under normal use and service. All warranties are conditioned upon the proper use of the products strictly in accordance with good commercial practice and applicable GF instructions and manuals, including proper use and maintenance. To the extent that a component is warranted by a third party, GF conveys all of its rights under that warranty to the original purchaser, to the extent permitted. This limited warranty shall only apply to defects that are reported to GF’s customer service team within the applicable warranty period and which, upon examination by GF or its authorized representative, prove to be a warranty item. This limited warranty is not transferable.

The warranted components and time period are set forth below:

Frame:..... ten years
Casters:..... one year
Upholstery: ..... one year
All other components:..... three years

The applicable warranty period shall commence from date of shipment to the original customer, unless there is an expiration date on the component in which case the warranty shall expire on the earlier of warranty period or the expiration date.

OBTAINING WARRANTY SERVICE

A GF Customer Service Representative must authorize warranty service. Specific directions will be provided by the Customer Service Representative. Failure to abide by the specific directions will result in denial of the warranty claim.

EXCLUSIONS

The warranty does not cover and GF shall not be liable for the following:

1) Defects, damage, or other conditions caused, in whole or in part, by misuse, abuse, negligence, alteration, accident, freight damage, tampering or failure to seek and obtain repair or replacement in a timely manner;
2) Products which are not installed, used, or properly cleaned and maintained as required in the official manual for the applicable product;
3) Products considered to be of a non-durable nature including, but not limited to: filters, fuses, gaskets, lubricants, and charts;
4) Accessories or parts not provided by GF;
5) Charges by anyone for adjustments, repairs, replacement parts, installation or other work performed upon or in connection with such products which are not expressly authorized in writing, in advance, by GF;
6) Any labor or shipping charges incurred in the replacement part installation or repair;
7) Costs and expenses of regular maintenance and cleaning; and
8) Representations and warranties made by any person or entity other than GF.

ENTIRE WARRANTY, EXCLUSIVE REMEDY AND CONSEQUENTIAL DAMAGES DISCLAIMER

THIS WARRANTY IS GF'S ONLY WARRANTY AND IS IN LIEU OF ALL OTHER WARRANTIES, EXPRESS OR IMPLIED. GF MAKES NO IMPLIED WARRANTIES OF ANY KIND INCLUDING ANY IMPLIED WARRANTIES OF MERCHANTABILITY OR FITNESS FOR A PARTICULAR PURPOSE. IF ANY MODEL OR SAMPLE WAS SHOWN TO THE CUSTOMER, SUCH MODEL OR SAMPLE WAS USED MERELY TO ILLUSTRATE THE GENERAL TYPE AND QUALITY OF THE PRODUCT AND NOT TO REPRESENT THAT THE PRODUCT WOULD NECESSARILY CONFORM TO THE MODEL OR SAMPLE IN ALL RESPECTS. THIS WARRANTY IS LIMITED TO THE REPAIR OR REPLACEMENT OF THE DEFECTIVE PARTS. GF SHALL NOT BE LIABLE FOR AND HEREBY DISCLAIMS ANY DIRECT, SPECIAL, INDIRECT, INCIDENTAL, EXEMPLARY OR CONSEQUENTIAL DAMAGES, INCLUDING, BUT NOT LIMITED TO: DAMAGES FOR LOSS OF PROFITS OR INCOME, LOSS OF USE, DOWNTIME, COVER, OR EMPLOYEE OR INDEPENDENT CONTRACTOR WAGES, PAYMENTS AND BENEFITS.

The warranties contained herein contain all the representations and warranties with respect to the subject matter of this document, and supersede all prior negotiations, agreements and understandings with respect thereto. The recipient of this document hereby acknowledges and represents that it has not relied on any representation, assertion, guarantee, warranty, collateral contract or other assurance, except those set out in this document.

For additional information on this product or this warranty, please contact a GF Customer Service Representative.

NOTES:

1) Additional terms and conditions may apply.
2) Freight claims must be notated on the appropriate shipping documents and must be made with immediacy. International, federal and state regulations govern specific requirements for freight claims. Failure to abide by those regulations may result in a denial of the freight claim. GF will assist you in filing the freight claim.
3) Claims for any short shipment must be made within three (3) days of the invoice date.

INDEX

A

Accessories 15
Arm panel removal and replacement 10
Assembly 5

B

Back assembly, assembling 6
Back cushion removal and replacement 10

C

Care and maintenance 11
Caster operation 7
Casters, locking 7
Caster, swivel 7
CAUTION statement, significance 4

D

Disposal 16
Disposal and key to symbols 16

I

Important safety precautions 4
Info statement, significance 4
Intended use 3
Introduction 3

K

Key to symbols 16

L

Limited warranty 17

N

NOTICE statement, significance 4

O

Operation 7

P

Position locking mechanism, operation 8
Proposition 65 WARNING 4

R

Recline mechanism, operation 8
Recliner operation 8
Recliner positioning mechanism, troubleshooting 9

S

Seat-leg cushion removal and replacement 10
Symbol key, Lumex Recliner product labels 16

T

Technical specifications 14

U

Unpacking instructions 5
Upholstery maintenance and stain removal 11
Upholstery removal and replacement 10

W

Warnings 4
WARNING statement, significance 4
Warranty, limited 17

©2012, GF Health Products, Inc. All Rights Reserved.
Lumex is a trademark of GF Health Products, Inc.
Tente is a trademark of TENTE GmbH & Co., FED REP GERMANY
GF Health Products, Inc. is an ISO 13485:2016 / MDSAP Certified Company.

Proudly Made in the USA

Manufactured by:
GF Health Products, Inc.