enthermics by PEDIGO

Operator's Manual

Combination Blanket/Fluid Warmer

EC250L DC250L
EC350L EC550BL

0957-00350

REV. B
3/26

EN

Manufacturer's Information

Copyright

© Copyright 1/26 by Pedigo Products, Inc.

All rights reserved.

This manual or any portion thereof may not be reproduced or used in any manner whatsoever without the express written permission of Pedigo Products, Inc.

Trademarks

All trademarks referenced in this documentation are the property of their respective owners.

Manufacturer

Pedigo Products, Inc

An ISO 13485:2016 certified company

Original instructions

The content in this manual is written in American English.

EC REP

Authorized Representative:
MDSS GmbH
Schiffgraben 41
30175 Hannover
Germany

Thank you for your Purchase!

This warmer has been thoroughly tested and inspected to ensure only the highest quality is provided. We supply the most durable, convenient, efficient and safe warming equipment on the market. All warmers are manufactured and fully inspected in the USA with a commitment to quality.

Enthermics by Pedigo Repair Service

Call

Call 360-695-3500 to reach our service call center for access to local authorized service agencies. Our call center is available M-F 7:00 a.m. to 5:00 p.m. PST.

Intended Use

Intended Use:
The fluid and combination warmer is a non-invasive, static heating device intended for the pre-procedural warming of unopened, medical grade fluid containers (such as IV bags or irrigation bottles), and/or blankets (combination warmers only) to their respective temperatures established by the facility and/or manufacturer of the product being heated.

The blanket warmer is a non-invasive, static heating device intended for the pre-procedural warming of medical grade blankets to their respective temperatures established by the facility and/or manufacturer of the product being heated.

Scope of Use:
The device is designed for use in clinical environments by healthcare professionals prior to use with a patient.

Contraindications/Limitations:
- The device is **not** intended for the active circulation of fluids.
- The device is **not** an in-line warmer and shall not be connected to an active infusion set or the patient.
- The device is **not** intended for warming blood or blood products (whole red blood, red blood cells, plasma), or flammable liquids.
- No part of the device comes into contact with the patient or the fluid itself.

This page is intentionally left blank.

Manufacturer's Information 2

Foreword 3
Thank you for your Purchase! 3

Safety 7
The Meaning of Signal Words 7
Safety Precautions 8

Labels 11
Label Locations 11

Specifications 13
Specification Information 13
Dimension Drawings 14

Installation 29
How to Unpack the Warmer 29
How to Install the Warmer 30
How to Install the Built-In Warmer into the Wall 32

Operation 35
Preparing the Warmer for First Use 35
How to Turn On and Turn Off the Warmer 36
How to Operate the TriMode Warmer 37
How to Change the Temperature Scale 39
How to Change the Sound Settings 39
How to Lock and Unlock the Controller 40

Maintenance 41
Maintenance Schedule 41
How to Clean the Warmer 43
Warmer Disposal / Decommissioning 45

Troubleshooting 47
What to do if a Power Interruption Occurs 47
What to do if the Alarm Indicator Light Flashes 48
Error Codes 49
How to Replace a Fuse 53

Electrical Information 55

Warranty 59
Warranty 59

TABLE OF CONTENTS

This page is intentionally left blank.

The Meaning of Signal Words

This manual contains signal words where needed. These signal words must be obeyed to reduce the risk of death, personal injury, or equipment damage. The meaning of these signal words is explained below.

DANGER

Danger indicates a hazardous situation which, if not avoided, will result in serious injury or death.

WARNING

Warning indicates a hazardous situation which, if not avoided, could result in serious injury or death.

CAUTION

Caution indicates a hazardous situation which, if not avoided, could result in minor or moderate injury.

NOTICE Notice indicates a situation which, if not avoided, could result in property damage.

NOTE: Note indicates additional information that is important to a concept or procedure.

Safety Precautions

Before you begin

Read and understand all instructions in this manual.

Electrical precautions

Obey these electrical precautions when using the warmer:

- Connect the warmer to a properly grounded outlet. Do not use the warmer if it is not properly grounded. Consult an electrician if there is any doubt that the outlet used is properly grounded.
- Keep the cord away from hot surfaces.
- Do not attempt to service the warmer or its cord and plug, when plugged in.
- Do not operate the warmer if it has a damaged cord or plug.
- Do not immerse the cord or plug in water.
- Do not let the cord hang over the edge of a table or counter.
- Do not use an extension cord.

Usage precautions

Obey these usage precautions when using the warmer:

- Only use this warmer for its intended use of warming medical solution bags, bottles, and/or blankets. Follow facility and solution manufacturer guidance regarding warming temperature for any item to be placed in the warmer.
- Do not use this warmer for warming blood or blood products.
- Do not cover or block any of the openings of this warmer.
- Do not use this warmer in a wet location.
- Only clean the warmer when the power cord is unplugged.
- Do not use corrosive chemicals when cleaning the warmer.
- Do not use the warmer cavity for storage.
- Do not remove exterior panels from the warmer or attempt repairs. The warmer has no user-serviceable internal components. Only perform routine cleaning and maintenance procedures specifically described in this manual. Inspection and servicing of internal components must only be performed by qualified service personnel.
- Only a qualified Pedigo service representative may make modifications to the warmer. Modifications to the warmer could be hazardous to users and patients.

Operator training

All personnel using the warmer must have proper operator training. Before using the warmer:

- Read and understand the operating instructions contained in all the documentation delivered with the warmer.
- Know the location and proper use of all controls.
- Keep this manual and all supplied instructions, diagrams, schematics, parts lists, notices, and labels with the warmer if the warmer is sold or moved to another location.

Operator qualifications

Only trained personnel with the following operator qualifications are permitted to use the warmer:

- Have received proper instruction on how to use the warmer.
- Are familiar with the purpose, limitations, and associated hazards of the warmer.

The warmer must not be used by:

- People impaired by drugs or alcohol.

Condition of warmer

Only use the warmer when:

- All controls operate correctly.
- The warmer is installed correctly.
- The warmer is clean.
- The warmer labels are legible.

Servicing the warmer

- Obey precautions in the manual, on tags, and on labels attached to or shipped with the warmer.
- Only trained personnel are permitted to service or repair the warmer. Repairs that are not performed by a trained technician, or the use of non-factory parts, will void the warranty and relieve all liability.
- Any troubleshooting guides and components views included with this manual are for reference only and are intended for use by qualified and trained service technicians.
- To prevent serious injury, death or property damage, have the warmer inspected and serviced at least every twelve (12) months by a trained technician.
- Contact Pedigo for the authorized service partner in your area.

Incident notice

- Any serious incident that has occurred in relation to the warmer should be reported to the manufacturer and the competent authority of the Member State in which the user and/or patient is established.

This page is intentionally left blank.

Label Locations

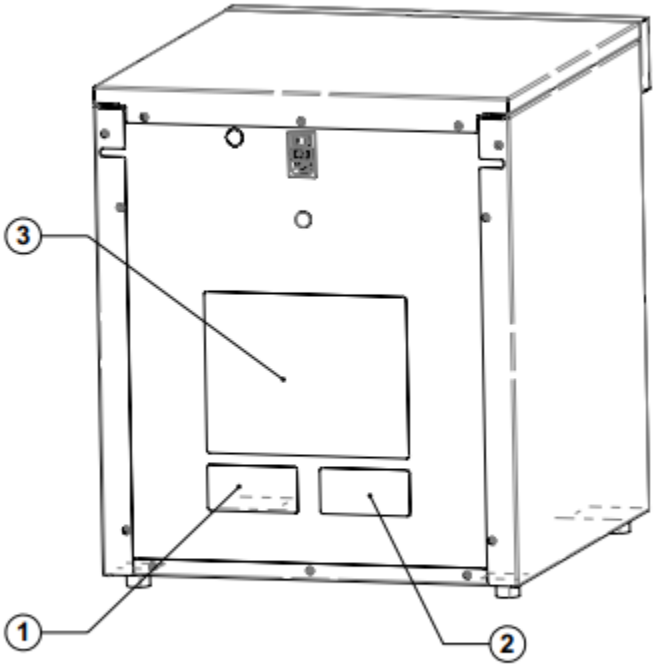

1	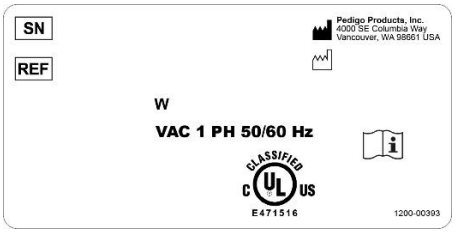	Serial Label
2		Pedigo Contact information
3		Electrical warning label

Specification Information

Model	EC/DC250L	EC350L	EC550BL-18	EC550BL-24
Intended use	Warming blankets, irrigation or injection fluids			
Weight	Net: 67lb (30kg) Ship: 116 lb (53kg)	Net: 91lb (41kg) Ship: 144 lb (65kg)	Net: 105lb (48kg) Ship: 185 lb (84kg)	Net: 135lb (61kg) Ship: 215 lb (98kg)
Storage capacity	2.5 ft^3	3.5 ft^3	4.75 ft^3	5.5 ft^3
Temperature range	Irrigation fluid (IRR): 90°F to 150°F (32°C to 66°C) Injection fluids (INJ): 90°F to 104°F (32°C to 40°C) Blanket (BLNKT): 90°F to 160°F (32°C to 71°C)			
Exterior Clearance Requirements	Free standing 3" (76mm) from rear 1" (25mm) from top 1" (25mm) from sides 0.70" (19mm) from bottom		EC550BL built- in models only 0.5" (12.7mm) from rear 0.5" (12.7mm) from top 0.5" (12.7mm) from sides	

Transportation and storage conditions

- Ambient temperature range of -40°F to +159°F (-40°C to +70°C).
- Relative humidity range of 10% to 95%, non-condensing.
- Atmospheric pressure range of 7.25 psi to 15.37 psi (50kPa to 106kPa).

Operating conditions

- The warmer must acclimate to the room temperature it will be placed in—24 hours is recommended.
- The recommended environmental temperature range is 60°F to 90°F (15°C to 32°C).
- The recommended relative humidity is above 20%, non-condensing.

Standards for electrical equipment

- Laboratory equipment listed by Underwriters Laboratories with respect to electrical shock, fire, and mechanical hazards only, in accordance with UL 61010-1 and CAN/CSA C22.2 No. 61010-1.
- Grounding reliability can only be achieved when the appliance is connected to an equivalent receptacle marked "Hospital Grade."
- IP-XO ordinary

c UL us LISTED LABORATORY EQUIPMENT

Protective Earth Ground Symbol

Dimension Drawings

EC/DC 250L shown with Standard Feet

NOTE: 1 basket standard for EC250L, 2 baskets standard for the DC250L.

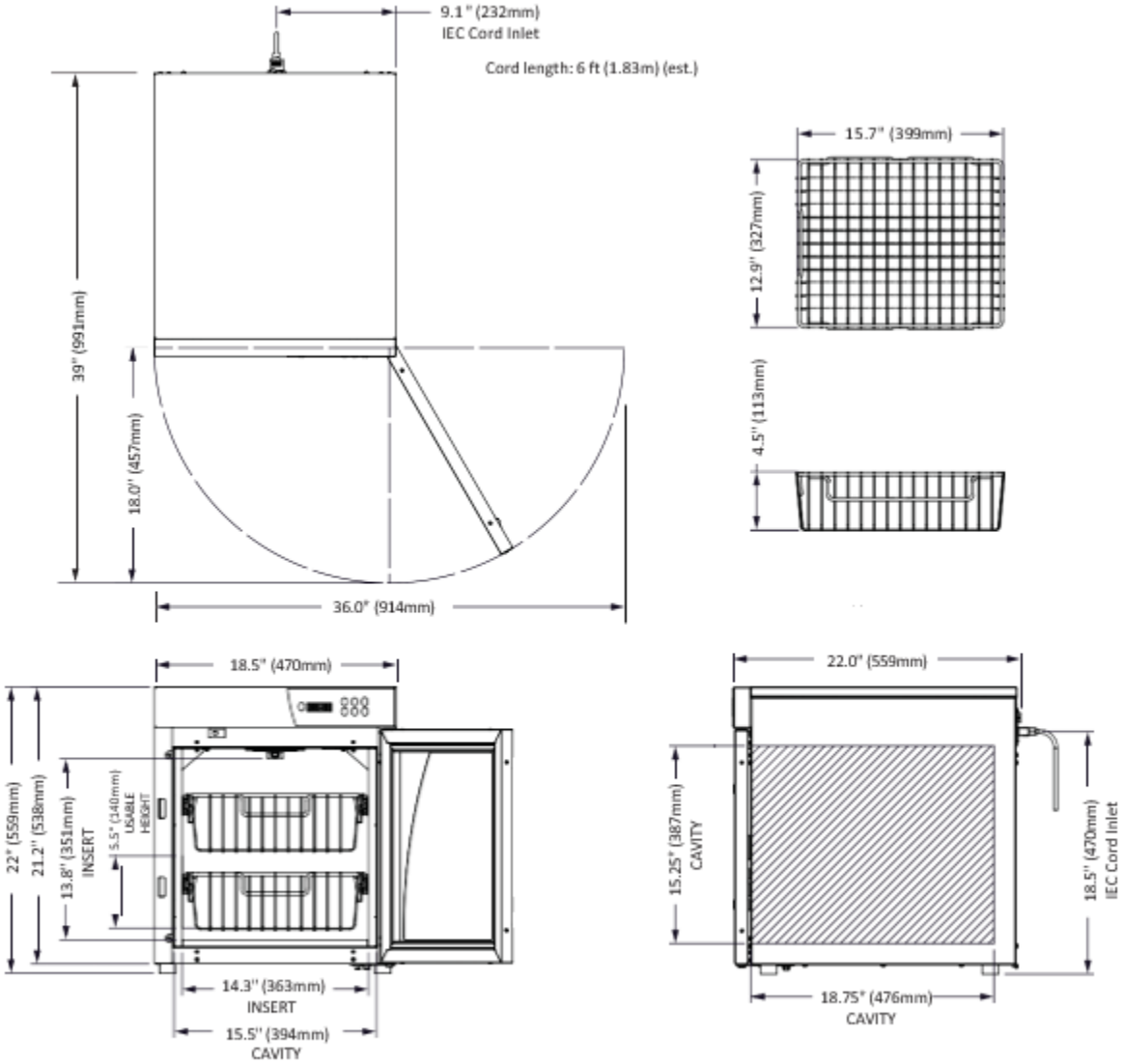

Specification Information

EC/DC 250L shown with Optional Bumpers and Casters

NOTE: 1 basket standard for EC250L, 2 baskets standard for the DC250L.

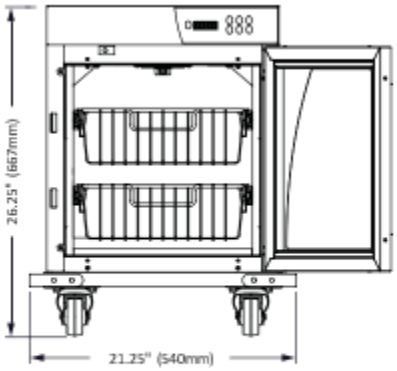

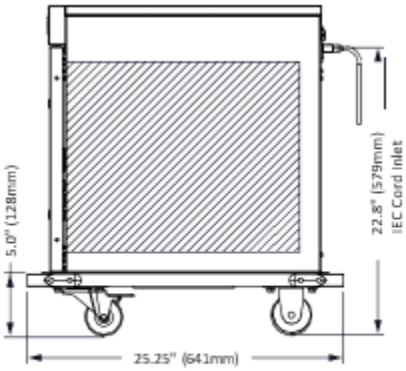

EC350L shown with Standard Feet

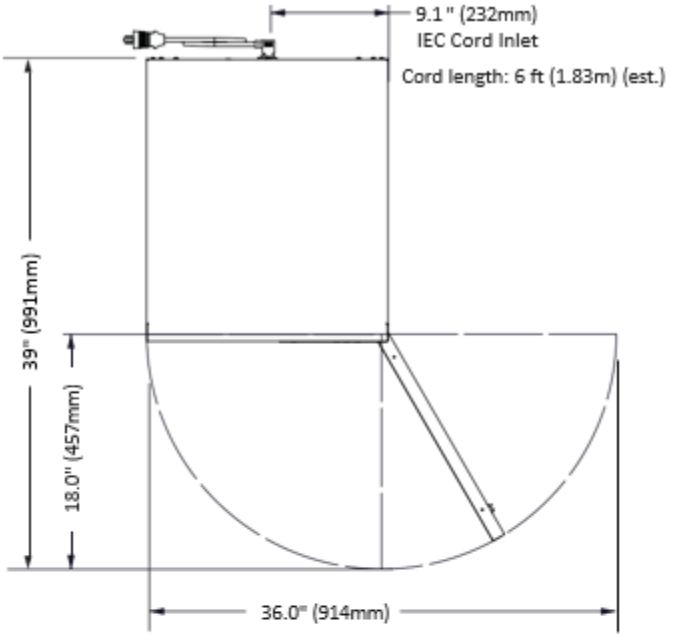

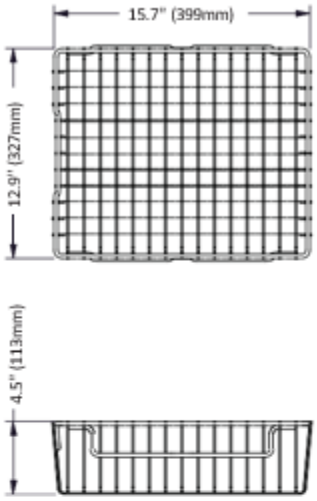

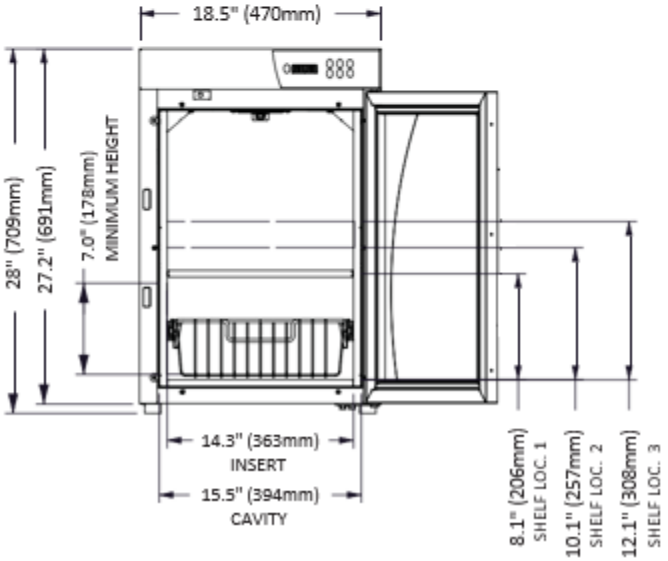

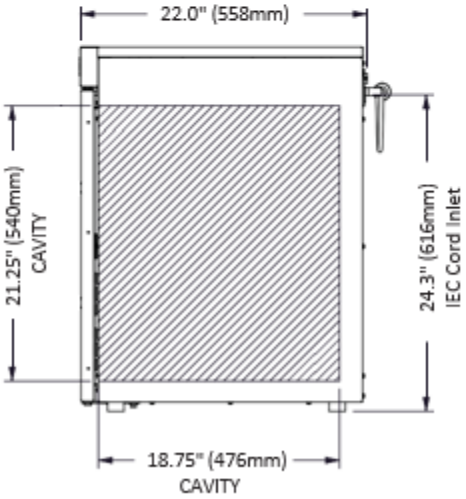

Specification Information

EC350L shown with Optional Bumpers and Casters

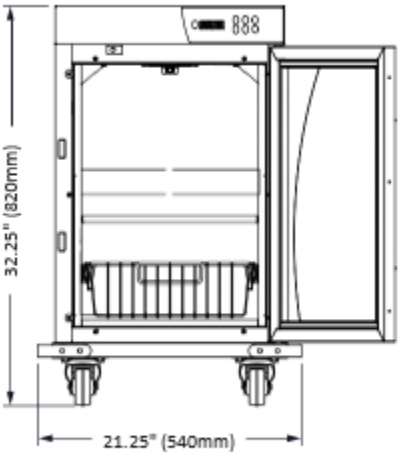

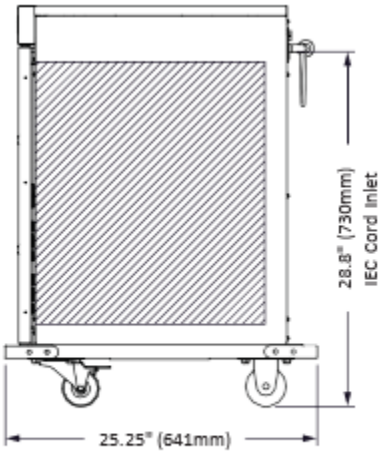

18” Depth EC550BL shown with Standard Feet

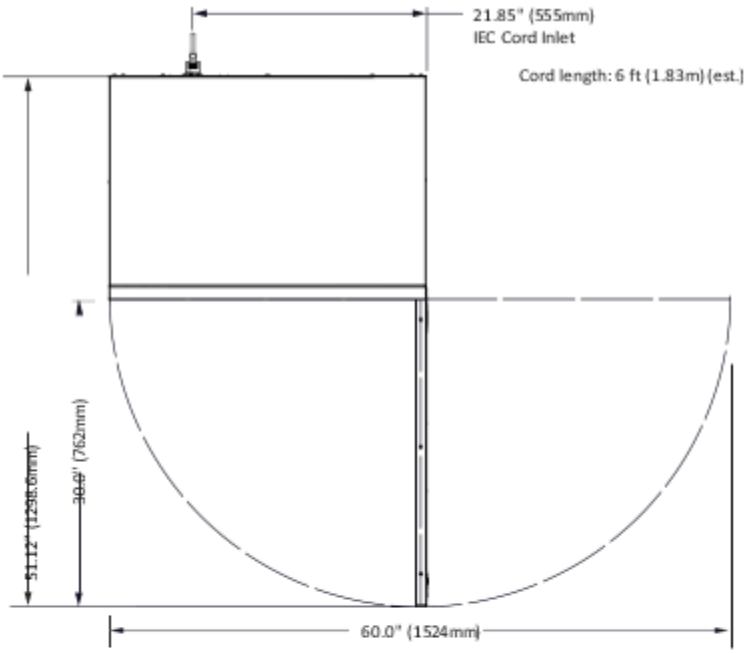

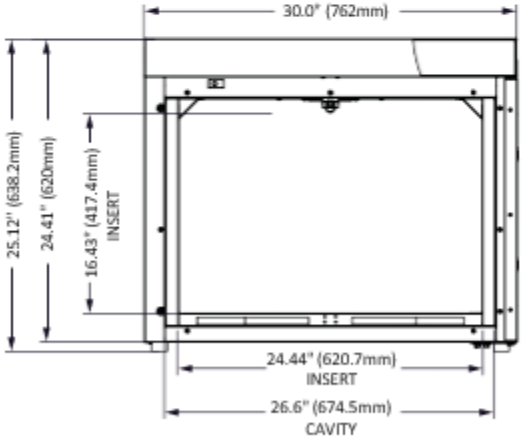

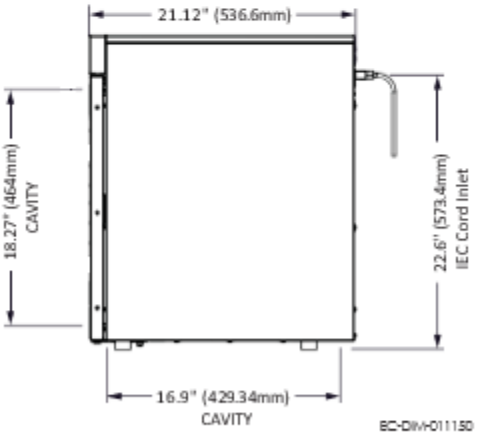

18” Depth EC550BL shown with Optional Caster Plate with Bumpers

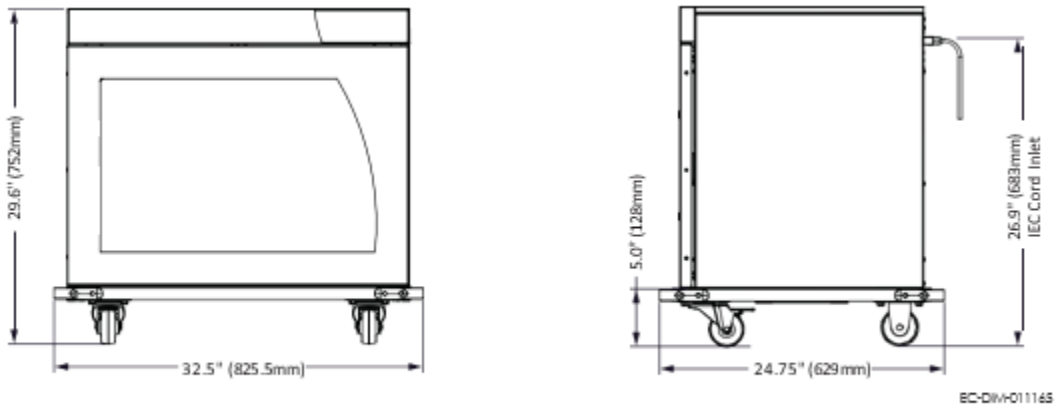

18” Depth EC550BL Built-In

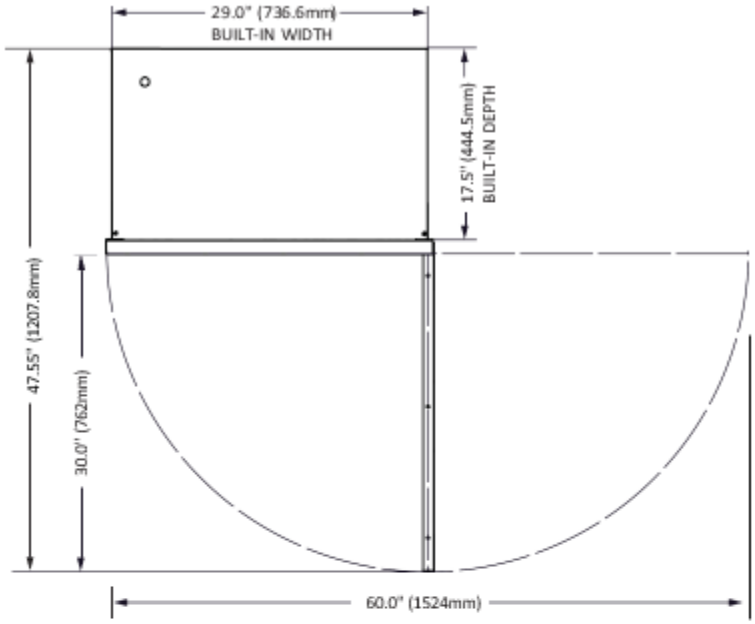

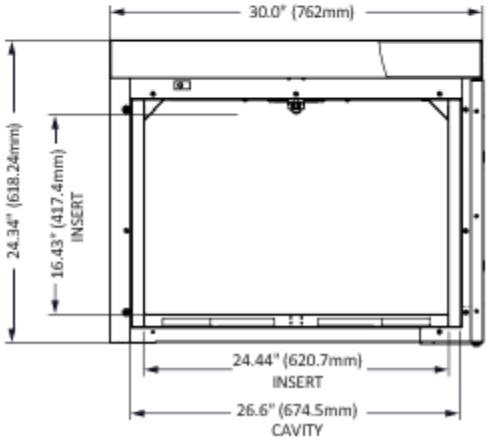

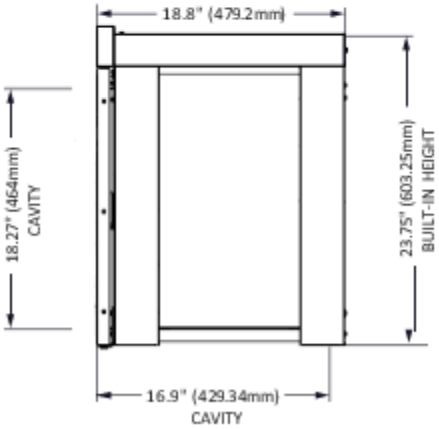

18” Depth EC550BL Built-In Cutout Specifications and Inlet Locations

CAUTION: Fire hazard.
Supply wires must be rated for a minimum wire temperature of 80°C.

NOTICE Built-in units must be hardwired to the facility mains with a 15A breaker switch.

Breaker*	Wire Size**	Wire Temperature
15A	12 AWG (1mm^2)	80°C (minimum)

*Electrical connections must meet applicable codes.
**IEC 60335 minimum.

Cutout Specifications	
Height	24.0” (609.6mm)
Width	29.25” (743mm)
Depth	18.0” (457.2mm)
Top of unit clearance	12.0” (304.75mm)

Inlet Options	
1	Back of warmer
2	Top of warmer
3	Left side of warmer
—	—

Continued on next page

Continued from previous page

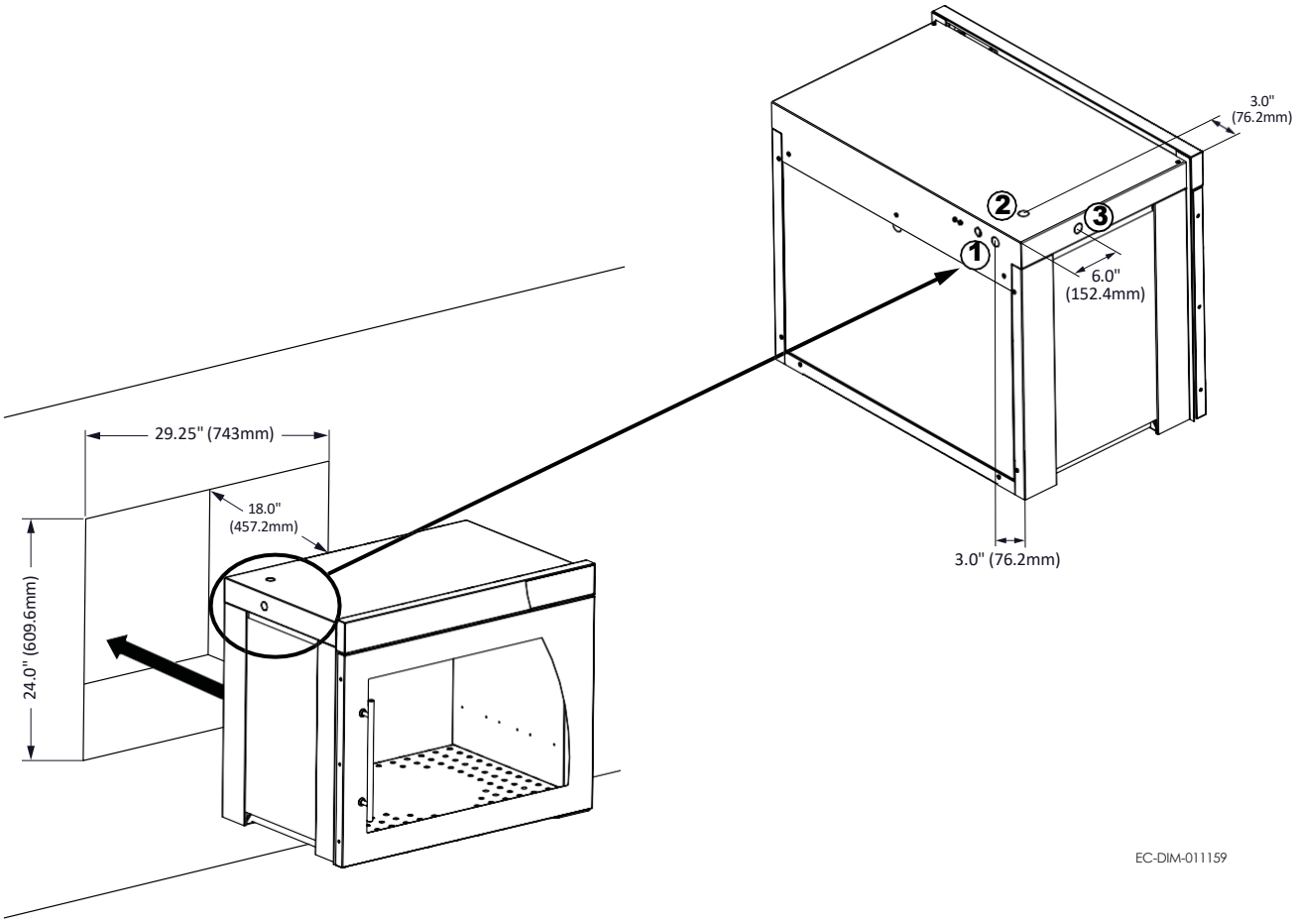

24” Depth EC550BL shown with Standard Feet

NOTE: 1 shelf standard for 24" depth EC550BL. 1 basket and 1 shelf optional for 24" depth EC550BL.

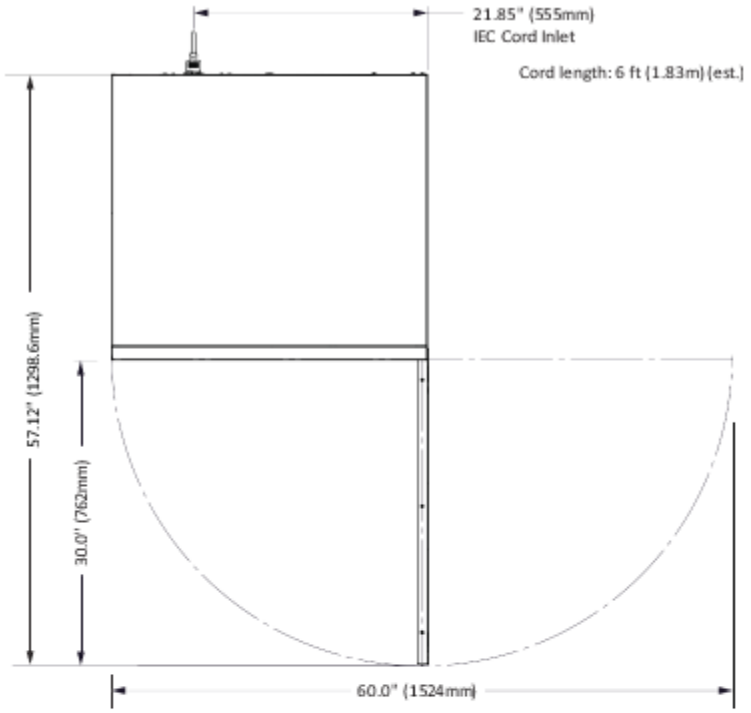

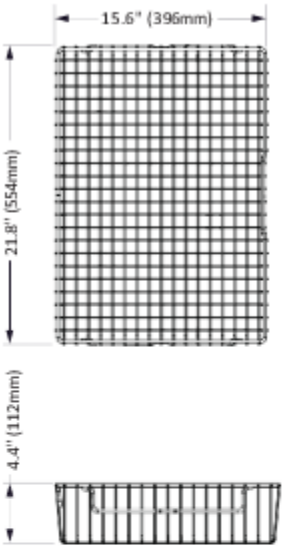

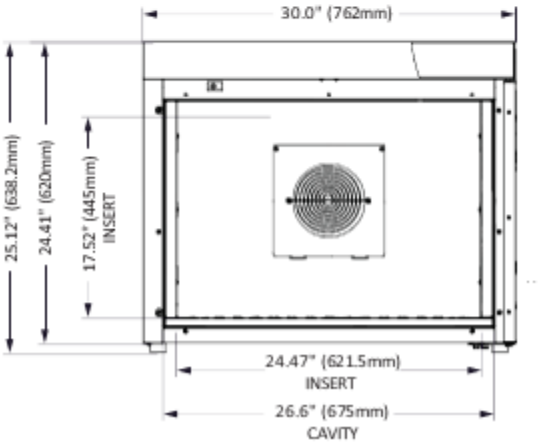

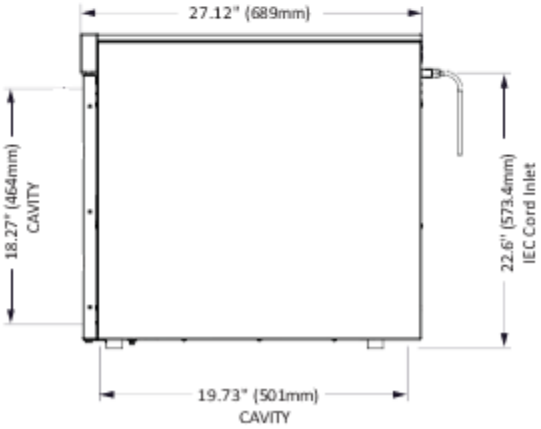

24” Depth EC550BL shown with Optional Basket and Shelf with Bumpers

NOTE: 1 shelf standard for 24" depth EC550BL. 1 basket and 1 shelf optional for 24" depth EC550BL.

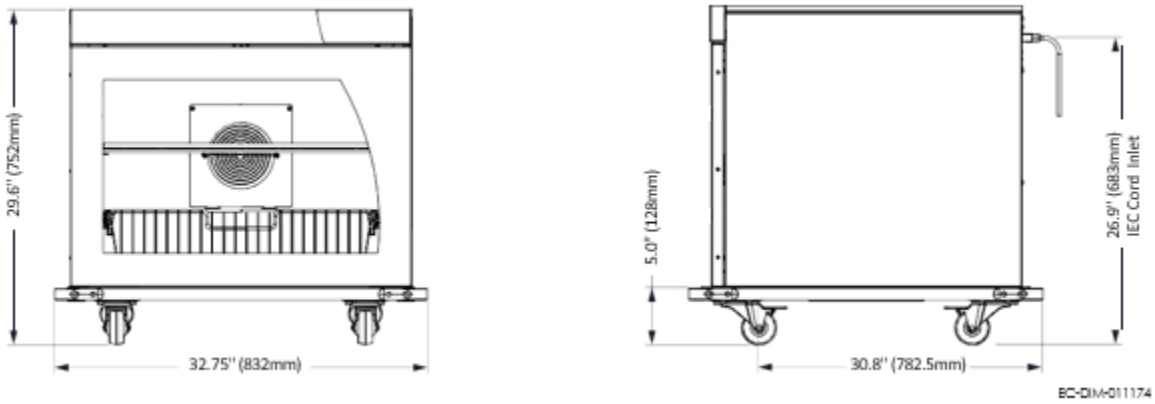

24” Depth EC550BL Built-In

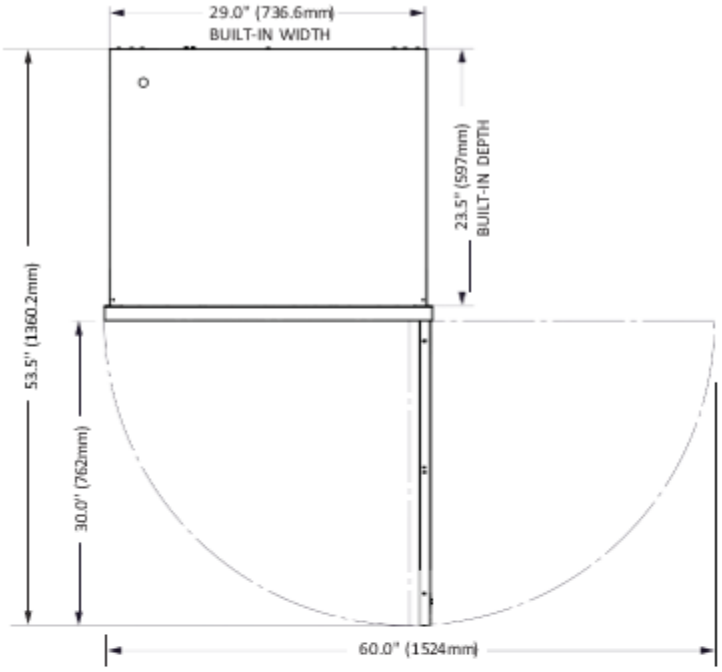

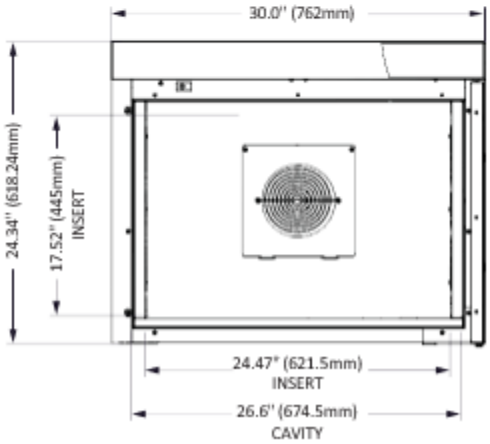

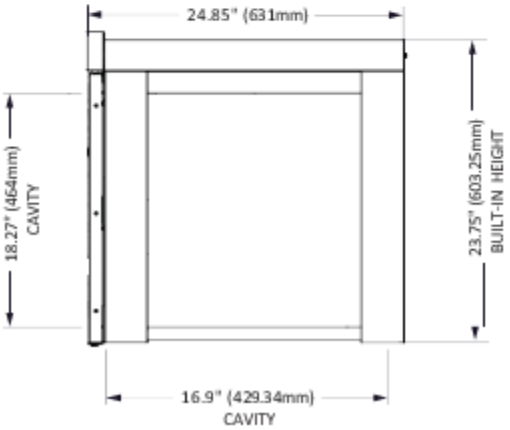

24” Depth EC550BL Built-In Cutout Specifications and Inlet Locations

CAUTION: Fire hazard.
Supply wires must be rated for a minimum wire temperature of 80°C.

NOTICE Built-in units must be hardwired to the facility mains with a 15A breaker switch.

Breaker*	Wire Size**	Wire Temperature
15A	12 AWG (1mm^2)	80°C (minimum)

*Electrical connections must meet applicable codes.
**IEC 60335 minimum.

Cutout Specifications	
Height	24.0” (609.6mm)
Width	29.25” (743mm)
Depth	24.0” (609.6mm)
Top of unit clearance	12” (304.75mm)

Inlet Options	
1	Back of warmer
2	Top of warmer
3	Left side of warmer
—	—

Continued on next page

Continued from previous page

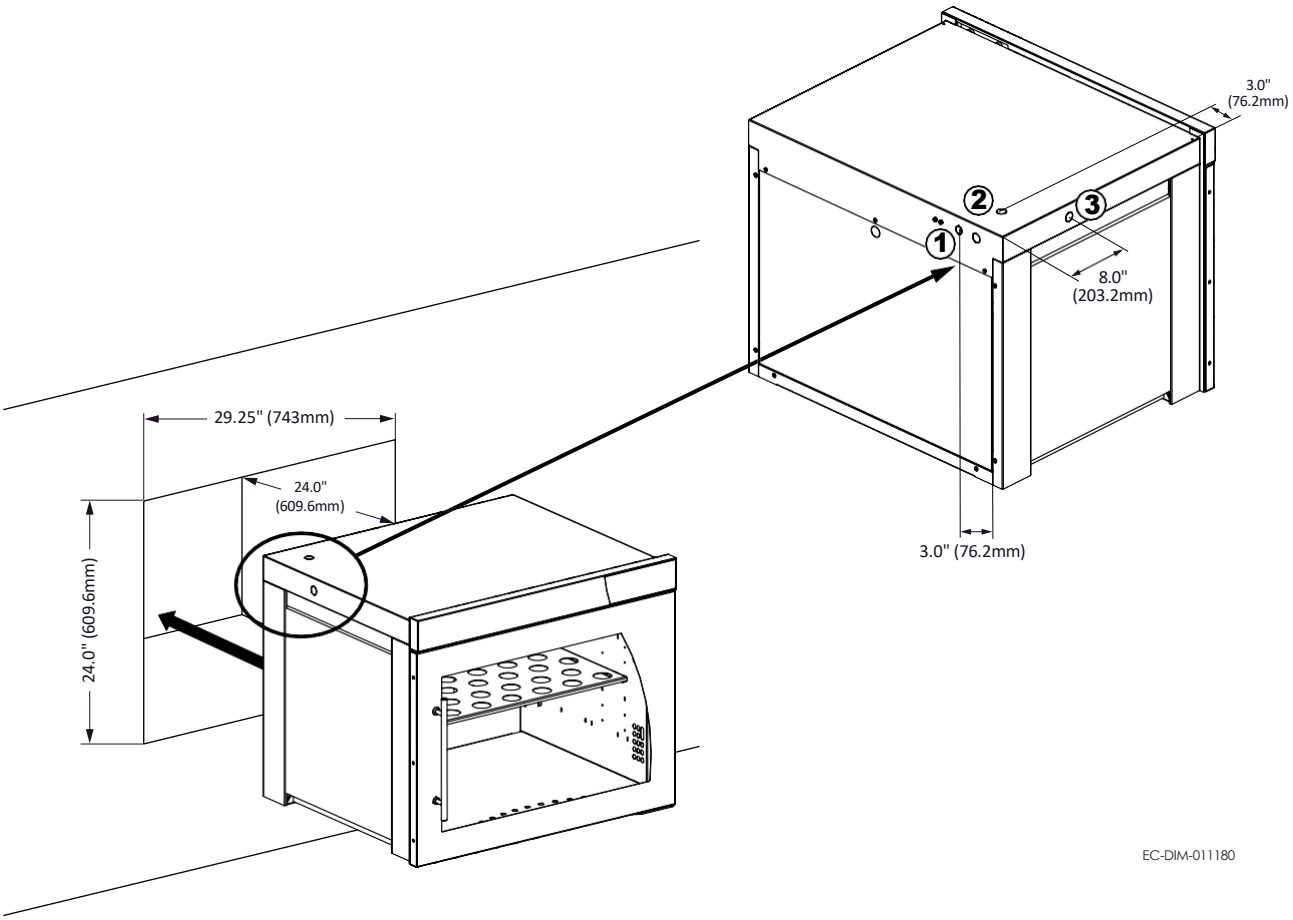

This page is intentionally left blank.

How to Unpack the Warmer

WARNING: Crushing hazard.

An unstable warmer can lead to a crushing hazard. Observe your facility's best practices for moving large equipment.

Before you begin

Make sure you have:

- Reviewed the warmer specifications.
- An appropriate lifting device and enough personnel to safely move and position the weight of the warmer.
- Cutting tools to remove the packaging.

Unpack the warmer

To unpack the warmer, do the following.

Step	Action
1.	**Remove** the box or crate. **Save** all packing materials for inspection by the carrier. **NOTE:** Examine the warmer for damage. If the warmer has been damaged, do not use the warmer until it has been inspected by an authorized service provider. Contact your carrier or customer service.
2.	**Cut and remove** the retaining straps and plastic wrap.
3.	**Remove** the warmer from the pallet using an appropriate lifting device.
4.	**Remove** the paperwork from the cavity.

Result

The warmer is now unpacked.

How to Install the Warmer

Before you begin

Make sure you have:

An appropriate lifting device and enough personnel to safely move and position the weight of the warmer.

Requirements

- The warmer must be installed on a level surface.
- The warmer must not be installed in any area where it may be affected by steam, dripping water, high temperature, or any other severely adverse conditions.

Voltages

Model	V	Ph	Hz	kW
EC/DC250L	120 220 230	1 1 1	50/60 50/60 50/60	0.44 0.44 0.44
EC350L	120 220 230	1 1 1	50/60 50/60 50/60	0.44 0.44 0.44
EC550BL-18	120 220 230	1 1 1	50/60 50/60 50/60	0.50 0.50 0.50
EC550BL-24	120 220 230	1 1 1	50/60 50/60 50/60	0.70 0.70 0.70

Position the warmer

To position the warmer, do the following.

Step	Action
1.	**Make sure** that: • The location where the warmer is being installed is rated to support the weight of the warmer; • The warmer is within five feet of the appropriate electrical outlet; • You follow the warmer clearance guidelines. Refer to topic *Specification Information* for clearance requirements. • You reference the built-in specification page for cutout dimensions.
2.	**Move** the warmer to the installation location and onto the final resting surface.
3.	**Lock** the casters, if equipped.

The warmer is now correctly positioned.

Continued on next page

Continued from previous page

Connect power

To connect electric power to the warmer, do the following.

4. **Connect** the plug to the electrical outlet.

> **NOTE:** For built-in units, contact a licensed contractor or electrician for connection to facility power.

Result

The warmer is now installed and ready to be used.

How to Install the Built-In Warmer into the Wall

Before you begin

Make sure you have:

- An appropriate lifting device and enough personnel to safely move and position the weight of the warmer.
- #3 Phillips screwdriver.
- Supplied (2) SC-47298 wall screws.

Procedure

To install the built-in warmer into the wall, do the following.

Step	Action
1.	After wiring the warmer, **install** the warmer into the wall cutout. **Open** the warmer door. 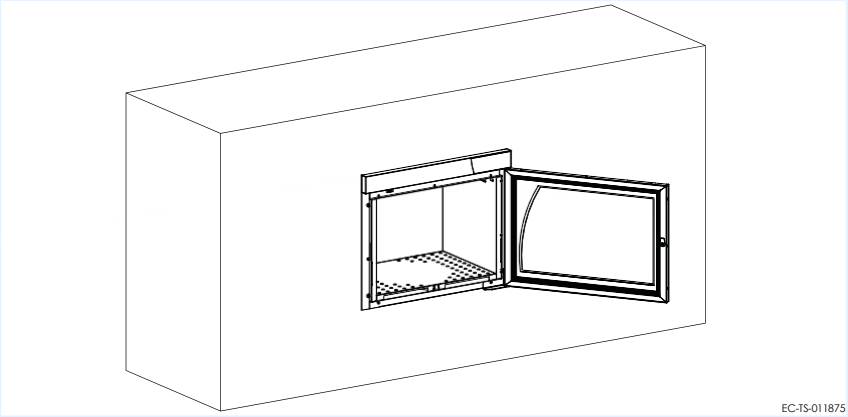
2.	**Remove** the three (3) screws A using a #3 Phillips screwdriver. **NOTE:** Set the screws to the side for re-installation. 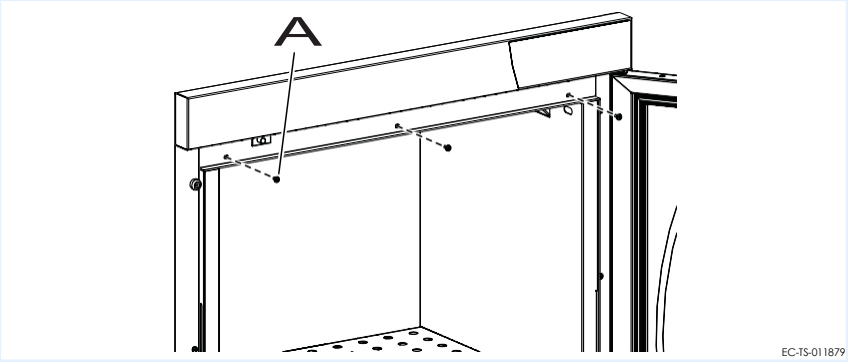

Continued on next page

Continued from previous page

3. **Remove** the interface panel by pushing the assembly approximately 0.5" (12.7mm) up, then pull forward at an angle to release the interface bends that are locked by the tabs.

> **NOTE:** Make sure to support the interface panel to reduce the strain on the cables.

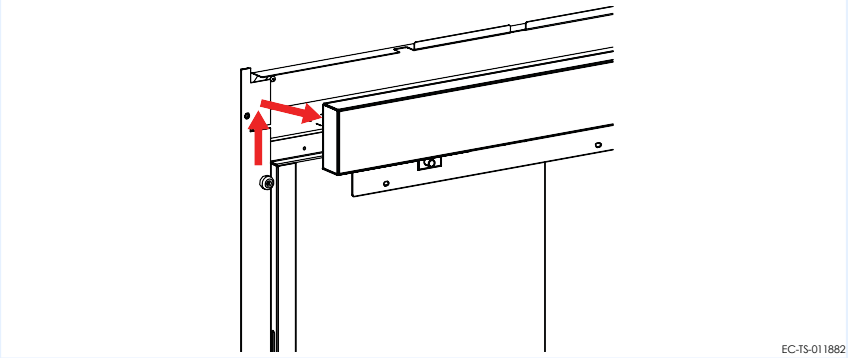

4. **Secure** the warmer to the wall using the two (2) self-tapping wall screws (SC-47298) B and a #3 Phillips screwdriver.

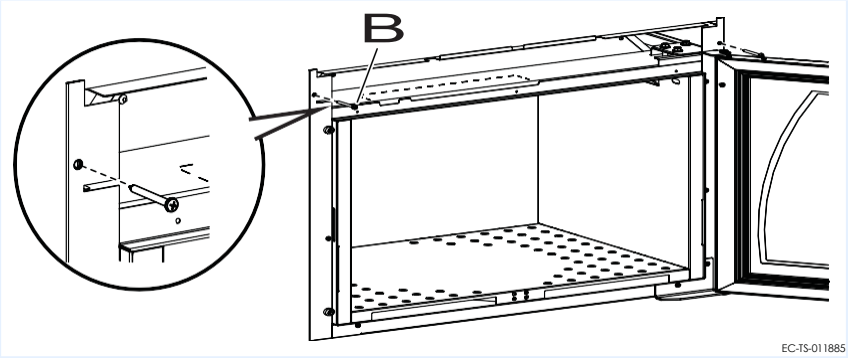

5. **Re-install** the interface assembly. **Make sure** all of the tabs lock the interface bends into place.

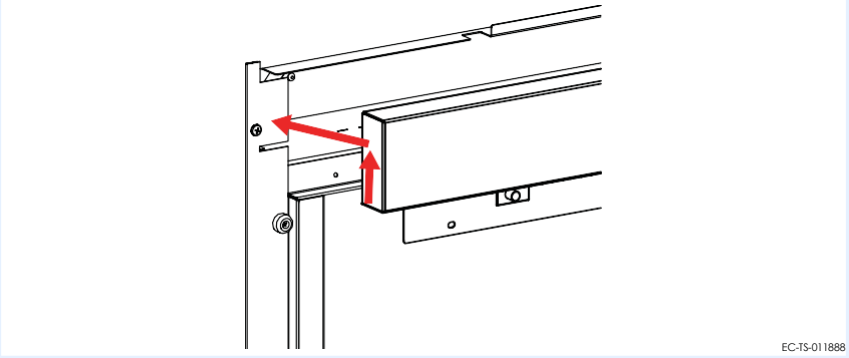

Continued on next page

Continued from previous page

6. **Re-install** the screws @ to the interface panel.

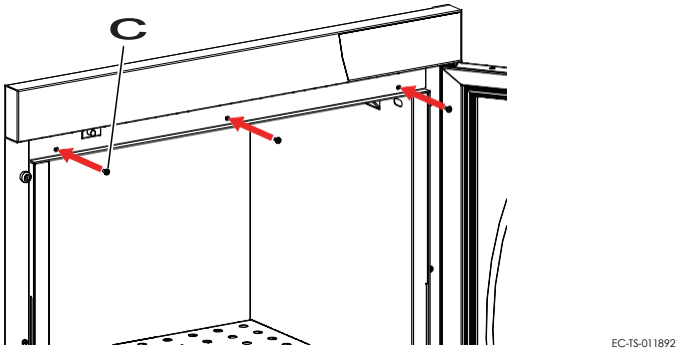

Result

The built-in warmer is now installed into the wall.

Preparing the Warmer for First Use

Before you begin

CAUTION: Burn hazard.
Allow the warmer to cool before cleaning.

NOTICE Do not use:
- abrasive cleaning compounds.
- chloride based cleaners.
- commercial or household cleaners containing ammonia.

Approved cleaning agents

- 70% or greater isopropyl alcohol

Procedure

To prepare the warmer for first use, do the following.

Step	Action
1.	**Make sure** that the warmer is turned off and cool.
2.	**Wipe** the outside of the warmer: • with a stainless steel cleaner, if stainless steel panels. • with an approved cleaning agent, if painted panels.
3.	**Clean** the interior of the warmer with a damp cloth or approved cleaning agent.
4.	**Dry** the interior and exterior of the warmer with a clean, lint-free cloth. **Leave** the door open until the interior of the warmer completely dries.
5.	**Clean** each side of the window pane with glass cleaner or distilled vinegar.

Result

The warmer is now ready for use.

How to Turn On and Turn Off the Warmer

Before you begin

The warmer must be connected to electric power.

Turning on the warmer

To turn on the warmer, do the following.

Step	Action
1.	**Set** the power switch A to the ON (I) position. 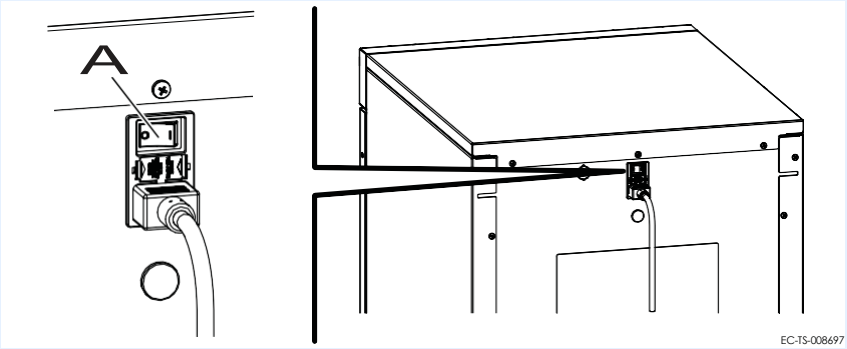
2.	**Press** the standby button ⏻. The screen turns on. **NOTE:** A temporary odor may be noticeable upon initial start-up of the warmer. Contact the manufacturer if the odor persists after a day or more of continuous use.

The warmer is now on.

Turning off the warmer

To turn off the warmer, do the following.

3.	**Press and hold** the standby button ⏻ until the screen turns off, then release the button.

The warmer is now off.

How to Operate the TriMode Warmer

Before you begin

The warmer must be connected to electric power and turned on.

WARNING: Personal injury hazard.

Do not operate the warmer in the presence of a flammable anesthetic mixture with air, oxygen, or nitrous oxide; in oxygen-enriched environments; or in any other potentially explosive environment.

WARNING: Personal injury hazard.

Verify the fluid temperature prior to using the fluid. Refer to the fluid manufacturer's label for recommended warming procedures.

Do not use any fluids that are warmed above the suggested temperature.

NOTICE

Do not overload the cavity.

Allow 1" (25mm) between the medical products to be warmed and the interior walls and 3" (76mm) between the top of the medical products and the sensor – see topic *Specification Information* for the storage capacity. Overloading or covering the sensor can potentially cause an error code or sensor failure.

Procedure

To operate the warmer, do the following.

Step	Action
1.	**Select** the operation mode. · **Press** the irrigation button IRR for irrigation mode. · **Press** the injection button INJ for injection mode. If irrigation or injection are selected, the operation mode will illuminate . · **Press** the blanket button BLNKT for blanket mode. The blanket operation mode icon will not illuminate. **NOTE:** Open the door to cool the cavity before changing from a higher temperature to a lower temperature.

Continued on next page

Continued from previous page

2. **Set** the temperature using the arrow buttons .

> **NOTE:** The irrigation temperature set-point range is 90°F – 150°F (32°C – 66°C).
>
> The injection temperature set-point range is 90°F – 104°F (32°C – 40°C).
>
> The blanket temperature set-point range is 90°F – 160°F (32°C – 71°C).

3. **Open** the door and load the fluid or blankets into the warmer.

   Close the door.

During the warming process

4. **Press** the temperature recall button to view the measured cavity temperature.

   The measured cavity temperature will display for five seconds. Then, the set-point temperature will display.

Result

The fluids or blankets are now warming.

How to Change the Temperature Scale

Before you begin

The warmer must be connected to electric power and the screen turned off.

Procedure

To change the temperature scale from °F to °C and vice versa, do the following.

Step	Action
1.	**Press and hold** the standby button until the screen turns off, then release the button.
2.	**Press and hold** the temperature recall button until the temperature digits disappears and only the F or C display, then release the button.
3.	**Press** the up and down arrow buttons to toggle between the temperature scales.
4.	**Press** the standby button to turn the screen on.

Result

The temperature scale has now been changed.

How to Change the Sound Settings

Before you begin

The warmer must be connected to electric power.

Procedure

To change the sound settings, do the following.

Step	Action
1.	**Press and while holding** the temperature recall but, press the down arrow button. Once the sound volume setting displays, release both buttons.
2.	**Press** the up and down arrow buttons to adjust the volume. The volume range is 0 (mute) to 12 (maximum).
3.	**Press** the standby button to turn the screen on.

Result

The sound setting has now been changed.

How to Lock and Unlock the Controller

Before you begin

The warmer must be turned on (screen is on).

Background

The controller can be locked to prevent changes being made to the temperature set-point.

Locking the controller

To lock the controller, do the following.

Step	Action
1.	**Press and while holding** the standby button, press the up arrow button. The lock indicator will illuminate. **NOTE:** Make sure the set-point temperature did not change during the locking process.

Unlocking the controller

To unlock the controller, do the following.

2.	**Press and while holding** the standby button, press the down arrow button. The lock indicator goes off. **NOTE:** Make sure the set-point temperature did not change during the unlocking process.

Result

The controller has now been locked or unlocked.

Maintenance Schedule

> **NOTE:** Do not remove exterior panels from the warmer or attempt repairs. The warmer has no user-serviceable internal components. Only perform routine cleaning and maintenance procedures specifically described in this manual.

Daily

For daily maintenance, do the following.

Check:

- the air vents in the airflow insert panels are not obstructed (if applicable).
- all fan guards are clear and not obstructed (if applicable).
- the number of bottles/bags, or blankets as applicable do not exceed the maximum capacity per shelf or basket.

Clean:

- any spills with a clean, lint free cloth. See topic *How to Clean the Warmer* for the list of approved cleaners.

Monthly

For monthly maintenance, do the following.

Check:

- the door gasket for tears and holes. Make sure that it is firmly attached to the door. Check the seal when the door is closed.
- the guards around the air temperature sensor are in place and fully secure to the warmer.
- the hardware securing the warmer(s) to the wall, if applicable.

Clean:

- the outside of the warmer with stainless steel cleaner. See topic *How to Clean the Warmer* for the list of approved cleaners.
- vacuum (if applicable):
  - fan openings
  - fan sail switch
  - vent openings

Continued on next page

Continued from previous page

Yearly

For yearly maintenance, do the following.

Check:

- the set-point temperature compared to the actual temperature displayed.
  - Check the cavity air temperature with a thermocouple placed 1" (25mm) from the cavity sensor. Do not allow the thermocouple to touch any surface. Monitor the temperature for approximately one hour in an empty cavity.
- the condition of the plug and cord and replace if damaged.
- the controller screen for excessive wear. Make sure the controller screen displays and operates properly.

Clean:

- the shelves and interior of the warmer. See topic *How to Clean the Warmer* for the list of approved cleaners.

How to Clean the Warmer

Before you begin

WARNING: Electric shock hazard.
Disconnect the warmer from electric power before cleaning.

WARNING: Crushing hazard.
An unstable warmer can lead to a crushing hazard. Observe your facility's best practices for moving large equipment.

CAUTION: Burn hazard.
Allow the warmer to cool before cleaning.

NOTICE Do not use:
- abrasive cleaning compounds.
- chloride based cleaners.
- commercial or household cleaners containing ammonia.

Approved cleaning agents

- 70% or greater isopropyl alcohol

Monthly cleaning procedure

To clean the warmer monthly, do the following.

Step	Action
1.	**Make sure** that the warmer is disconnected from electric power and cool.
2.	**Wipe** the outside of the warmer with a stainless steel cleaner.
3.	**Vacuum** lint from fan openings, fan sail switch, and vent openings.
4.	**Clean** the interior of the warmer with a damp cloth or approved cleaning agent.
5.	**Dry** the interior and exterior of the warmer with a clean, lint-free cloth. **Leave** the door open until the interior of the warmer completely dries.
6.	**Clean** each side of the window pane with glass cleaner or distilled vinegar.

Continued on next page

Continued from previous page

Yearly cleaning procedure

To clean the warmer yearly, do the following.

Step	Action
1.	**Make sure** that the warmer is disconnected from electric power and cool.
2.	**Remove** the shelves A and/or basket B (if applicable) from the interior of the warmer. 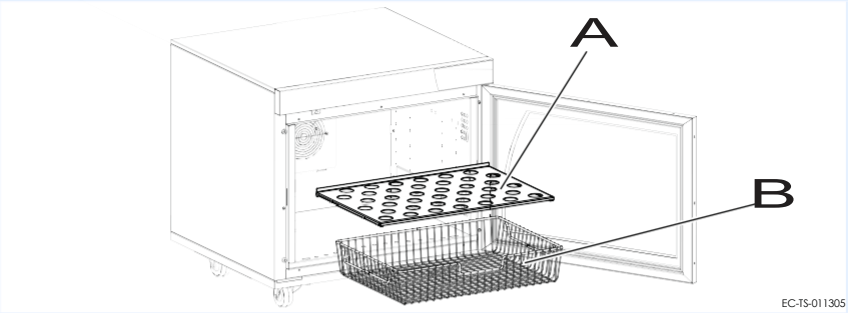
3.	**Remove** the side panels **C** from the interior of the warmer cavity. 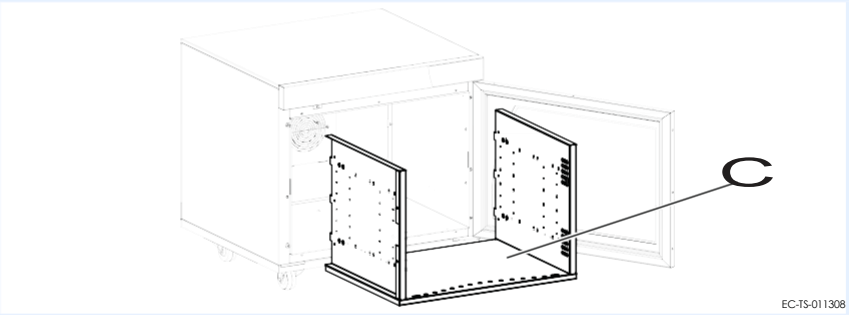
4.	**Clean** the shelves and interior with a damp cloth or approved cleaning agent.
5.	**Dry** the interior of the warmer with a clean, lint-free cloth. **Leave** the door open until the interior of the warmer completely dries.
6.	**Clean** each side of the window pane with glass cleaner or distilled vinegar.
7.	**Re-install** the side panels and shelves.
	WARNING: Personal injury hazard. The blankets or fluids may overheat if the side panels and shelves are not in place. Make sure to re-install the side panels and shelves before operating the warmer.

Result

The warmer is now clean.

Warmer Disposal / Decommissioning

This product and its accessories must be disposed of according to local laws and regulations. Do not dispose of this product as unsorted municipal waste.

This page is intentionally left blank.

What to do if a Power Interruption Occurs

Background

You may need to reset the warmer in the case that a power interruption occurs. When the power is restored, the ON/OFF status indicator LED decimal flashes 68F.

LED

The controller stores all settings and continues operation using these settings in the event of a power interruption.

Procedure

To continue operation of the warmer, do the following.

Step	Action
1.	**Press** the standby button. The status indicator LED decimal goes out. If an error code displays, refer to topic *Error Codes*.
2.	**Make sure** the fluids or blankets are at the correct temperature before using. **NOTE:** Inspect the fluids for their expiration date before use.

Result

Resume operation of the warmer.

What to do if the Alarm Indicator Light Flashes

Background

The alarm indicator light flashes and the controller sounds an alarm when the warmer malfunctions.

Procedure

If the alarm indicator light flashes, do the following.

Step	Action
1.	**Press** the standby button to acknowledge and mute the alarm. The alarm indicator light goes off. Refer to the troubleshooting section for the error code.
2.	**Make sure** the fluids or blankets are the correct temperature before using.

Result

Resume operation of the warmer.

Error Codes

Background

This section is provided for the assistance of qualified and trained service technicians only and is not intended for use by untrained or unauthorized service personnel. Failure to observe this precaution may void the warranty.

NOTE: If the warmer is not operating properly, check the following before calling an authorized service agent:

Verify that the power to the warmer is on.

If applicable, ensure the female end of plug is securely seated in the warmer and that the male end of plug is in an appropriate, functioning outlet.

If applicable, examine the fuses. Replace the fuses, refer to topic *How to Replace a Fuse*.

If applicable, examine the high limit manual reset button. If the high limit manual reset button is tripped, reset the warmer, refer to topic *How to Manually Reset the Warmer*.

NOTE: All non-critical codes can be cleared using the standby button. Critical errors (marked with a *) can only be cleared by setting the power switch at the rear of the warmer to the off (O) position and allowing the warmer to cool.

NOTICE Do not attempt to repair or service the warmer beyond this point. Contact the manufacturer for the nearest authorized service agent. Repairs made by any other service agent without prior authorization by the manufacturer will void the warranty.

Code	Refers to	Action required
Display flashes set point	Cavity temperature higher than set point	Cavity temperature is higher than the set point temperature. ▪ Allow cavity to cool to set point temperature.

Code	Refers to	Action required
E-10 ES10 ES20 ES30 ES40 ES50 ES60 ES70	Cavity sensor Sensor 1 Sensor 2 Sensor 3 Sensor 4 Sensor 5 Sensor 6 Sensor 7	Sensor is shorted. Software disengages heating pads. Acknowledge error by pressing the standby button. If error persists, a qualified service technician should test the sensor. ▪ Test the sensor. Detach the sensor from the warmer. Use an Ohm meter to measure the resistance of the sensor. Check the sensor at 25°C (77°F). If the reading is 10 KOhm ±1.5 KOhm, replace the display. If the reading is ±2 KOhm, replace the sensor. ▪ Check the wires for integrity. Inspect the connections at the control and terminal block to ensure proper and secure connections. If necessary, re-secure the faulty connections. ▪ Contact service if error persists.
E-11 ES11 ES21 ES31 ES41 ES51 ES61 ES71	Cavity sensor Pad sensor 1 Pad sensor 2 Pad sensor 3 Pad sensor 4 Pad sensor 5 Pad sensor 6 Pad sensor 7	Sensor is open. Software disengages heating pads. Acknowledge error by pressing the standby button. If error persists, a qualified service technician should test the sensor. ▪ Test the sensor. Disconnect the sensor from the warmer control PCB and use an Ohm meter to measure the resistance of the sensor. Sensor should measure 10 KOhm ± 1.5 KOhm at 25°C (77°F). ▪ Check the wires for integrity. Check for proper and secure connections at the control and terminal block. If necessary, re-secure the faulty connections. ▪ Contact service if error persists.
E-30	Under temperature	The cavity temperature is lower than the set temperature for 90 minutes or longer. ▪ Make sure the door is closed. ▪ If the cavity is overloaded, redistribute the inventory. Do not exceed the height of the insert. ▪ Test the sensor. Disconnect the sensor from the warmer control PCB and use an Ohm meter to measure the resistance of the sensor. Sensor should measure 10 KOhm ± 1.5 KOhm at 25°C (77°F). ▪ Replace sensor if measurement is outside of tolerance.
*E-31	Cavity sensor	▪ The sensor reading is above the temperature set-point. Blanket warming mode triggers at 15° over set-point. Fluid warming mode triggers at 5° over set-point. ▪ The difference between the room temperature and the fluid set-point temperature must be greater than 11°C (20°F). ▪ Contact service if error persists.

Code	Refers to	Action required
P131 P231 P331 P431 P531 P631 P731	Pad sensor 1 Pad sensor 2 Pad sensor 3 Pad sensor 4 Pad sensor 5 Pad sensor 6 Pad sensor 7	Heater pad over-temp error. ▪ Software disengages heating pads. ▪ Acknowledge error by pressing the standby button. ▪ Allow the warmer to cool. ▪ Contact service if the error persists.
*E-33	Cavity sensor	▪ Sensor reading is above maximum allowable temperature set-point and over temp value. Blanket warmers trigger at 82°C (180°F). Fluid warmers trigger at 71°C (160°F). ▪ Contact service if error persists.
*E-50	Analog to Digital Converter Error	▪ Remove inventory, discard if necessary, and allow the warmer to cool down. ▪ If error persists after cool down and reset, the control assembly should be replaced by a qualified service technician. Contact service.
E-60	Real Time Clock Checksum Error (Blanket warmers only)	Real time clock rechargeable battery backup has discharged. ▪ Plug the warmer into the outlet for 30 minutes.
*E-61	Real Time Clock (Blanket warmers only)	Real time clock not responding. Contact service if error persists.
E-62	Real Time Clock (Blanket warmers only)	Timer overlay is present, but no real time clock is detected. Contact service.
*E-70	Pad Count Error	More heater pads detected than set for. Hold the standby button for 12 seconds until display shows "PAd#" (# = number of pads selected [3-7]). Press up or down arrow to adjust to correct number of pads. [Blanket
*E-71	Personality Error	Contact service.
E-80	EEPROM Error	EEPROM not responding. Contact service if error persists.
*E-81	Calibration not locked	Contact service.
*E-83	EEPROM Error	Contact service for help resetting the control.
E-87	EEPROM Error	Stored offsets corrupted. Offsets reset to 0. ▪ Control may need to be re-calibrated. ▪ Possible bad EEPROM. ▪ Contact service if error persists.

Code	Refers to	Action required
E-90	Button stuck	A button has been held down for >60 seconds. Adjust control. Error will reset when the problem has been resolved.
E-95	Factory Test pin short detected.	Ensure that debris is not causing a short between the test pins. If the pins are clean, replace the control.
*E-98	Temperature Delta Error	Temperature of the cavity sensors 1 and 2 differ by more than 3.3°C (6°F). ▪ Remove product and allow the warmer to cool down. ▪ Verify that the product sensor is clean and operating correctly. ▪ Set the power switch to the OFF position to clear the error code. ▪ If error persists, the cavity sensor should be replaced by a qualified service technician. Contact service.
E-99	Hardware Over Temp	▪ Inspect the connections and condition of high limit bimetal thermostat. ▪ If applicable, make sure that the compartment fan motor is operating. ▪ Contact service if error persists.
*EFAn	Fan or Fan Sensor Failure	▪ Check to make sure the fan sensor wires did not disconnect from the fan or the control board. ▪ If the error persists after checking the wires, replace the fan.
Flashing yellow iv fluid temperature status indicator	Flashing yellow LED is illuminated within iv storage shelf	▪ Set the power switch to the OFF position. ▪ Remove any iv bags from inside the warmer. ▪ Set the power switch to the ON position. ▪ Visually check to see if flashing yellow LED remains illuminated. ▪ Contact service if error persists.

*All non-critical codes can be cleared using the standby button. Critical errors (marked with a *) can only be cleared by setting the power switch at the rear of the warmer to the OFF position and allowing the warmer to cool.

How to Replace a Fuse

WARNING: Fire and electrical shock hazard.

Replace with equivalent type of fuse only. See the warmer label for fuse type information. Access should be made by qualified service technicians only.

Procedure

To replace a fuse, do the following.

Step	Action
1.	**Press and hold** the standby button until the screen turns off, then release the button.
2.	**Set** the power switch a to the OFF (0) position. 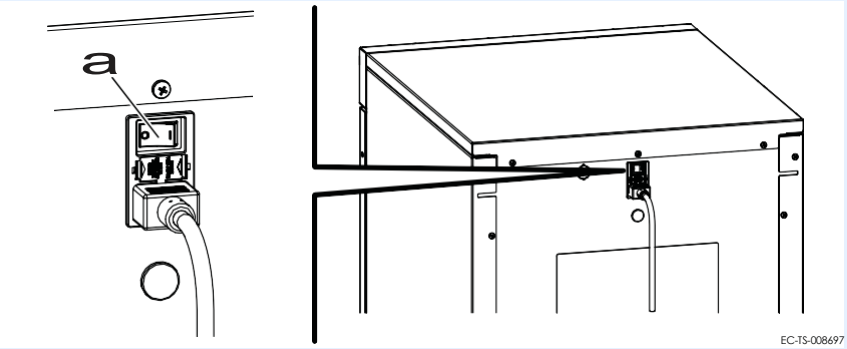
3.	**Unplug** the power cord from the electric power source and the power inlet on the warmer.
4.	**Pinch** the side tabs and pull out the fuse drawer b. 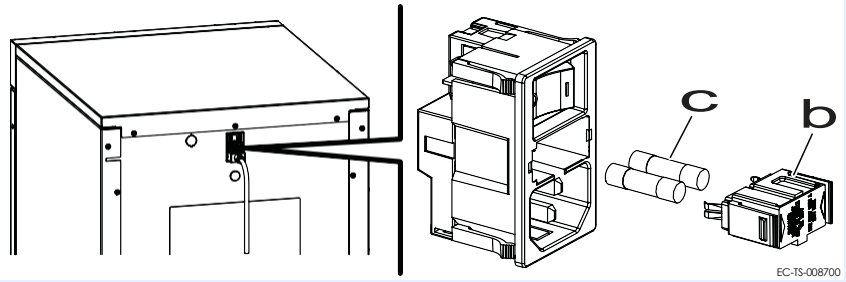
5.	**Remove** the fuse C
6.	**Replace** the fuse with a new fuse.
7.	**Re-install** the fuse drawer.

Result

The fuse has now been replaced.

This page is intentionally left blank.

Guidance and Manufacturer's Declaration

The warmer requires special precautions regarding EMC (Electromagnetic Compatibility) and needs to be installed and put into service according to the EMC information provided in the accompanying documents.

Portable and mobile RF communications equipment can affect medical electrical equipment.

A risk of increased emissions or decreased immunity may result if the power cord is altered or a manufacturer supplied power cord is not used.

The warmer should not be used adjacent to or stacked with other equipment.

The essential performance of the warmer is to not exceed an internal temperature of 180°F (82°C) for blanket warmers or 150°F (66°C) for fluid warmers.

Electromagnetic emissions

The warmer is intended for use in the electromagnetic environment specified below.

Emission test	Compliance	Electromagnetic environment - guidance
RF emissions; CISPR 11	Group 1	The warmer uses RF energy only for internal function. Therefore, its RF emissions are very low and are not likely to cause any interference in nearby electronic equipment.
RF emissions; CISPR 11	Class A	The warmer is suitable for use in all establishments, other than domestic establishments and those directly connected to the public low-voltage power supply network that supplies buildings used for domestic purposes.
Harmonic emissions; IEC 61000-3-2	Class A	
Voltage fluctuations/Flicker emissions; IEC 61000-3-3	Complies without conditions	

Continued on next page

Continued from previous page

Electromagnetic immunity

The warmer is intended for use in the electromagnetic environment specified below.

Immunity test	IEC 60601 test level	Compliance level	Electromagnetic environment - guidance
Electromagnetic discharge (ESD) IEC 61000-4-2	±8 kV contact ±8 kV air	±8 kV contact ±8 kV air	Floors should be wood, concrete or ceramic tile. If floors are covered with synthetic material, the relative humidity should be at least 30%.
Electrical fast transient/burst IEC 61000-4-4	±2 kV for power supply lines; ±1 kV for input/output lines	+2 kV for power supply lines	Main power quality should be that of a typical commercial or hospital environment. The warmer does not have any input/output lines.
Surge IEC 61000-4-5	±1 kV differential mode; ±2 kV common mode	±1 kV differential mode; ±2 kV common mode	Mains power quality should be that of a typical commercial or hospital environment.
Voltage dips, short interruptions and voltage variations on power supply input lines IEC 61000-4-11	<5% UT (>95% dip in UT) for 0.5 cycle 40% UT (60% dip in UT) for 5 cycles 70% UT (30% dip in UT) for 25 cycles <5% UT (>95% dip in UT) for 5 sec	<5% UT (>95% dip in UT) for 0.5 cycle 40% UT (60% dip in UT) for 5 cycles 70% UT (30% dip in UT) for 25 cycles <5% UT (>95% dip in UT) for 5 sec	Mains power quality should be that of a typical commercial or hospital environment. If the user of the warmer requires continued operation during power mains interruptions, it is recommended that the warmer be powered from an uninterrupted power supply or a battery.
Power frequency (50/60 Hz) magnetic field IEC 61000-4-8	3 A/m	3 A/m	Power frequency magnetic fields should be at levels characteristic of a typical location in a typical commercial or hospital environment.

NOTE: UT is the a.c. mains voltage prior to application of the test level.

Continued on next page

Continued from previous page

Electromagnetic emissions

The warmer is intended for use in the electromagnetic environment specified below.

Immunity test	IEC 60601 test level	Compliance level	Electromagnetic environment - guidance
Conducted RF IEC 61000-4-6 Radiated RF IEC 61000-4-3	3 V/m 150 kHz to 80 MHz 3 V/m 80 MHz to 2.5 GHz	3 V/m	Portable and mobile RF communications equipment should be used no closer to any part of the warmer, including cables, than the recommended separation distance calculated from the equation applicable to the frequency of the transmitter. Recommended separation distance d = [3.5/3] √P d = [3.5/3] √P 80 MHz to 800 MHz d = [7/3] √P 800 MHz to 2.5 GHz where P is the maximum output power rating of the transmitter in watts (W) according to the transmitter manufacturer and d is the recommended separation distance in meters (m). Field strengths from fixed RF transmitters, as determined by an electromagnetic site survey[1], should be less than the compliance level in each frequency range[2]. Interference may occur in the vicinity of equipment marked with the following symbol:

NOTE: At 80 MHz and 800 MHz, the higher frequency range applies. These guidelines may not apply in all situations. Electromagnetic propagation is affected by absorption and reflection from structures, objects and people.

1. Field strengths from fixed transmitters, such as base stations for radio (cellular/cordless) telephones and land mobile radios, amateur radio, AM and FM radio broadcast and TV broadcast cannot be predicted theoretically with accuracy. To assess the electromagnetic environment due to fixed RF transmitters, an electromagnetic site survey should be considered. If the measured field strength in the location in which the warmer is used exceeds the applicable RF compliance level above, the warmer should be observed to verify normal operation. If abnormal performance is observed, additional measures may be necessary, such as reorienting or relocating the warmer.
2. Over the frequency range 150 kHz to 80 MHz, field strengths should be less than [VI] V/m.

Continued on next page

Continued from previous page

Electromagnetic immunity distance

The warmer is intended for use in an electromagnetic environment in which radiated RF disturbances are controlled. The user of the warmer can help prevent electromagnetic interference by maintaining a minimum distance between portable and mobile RF communications equipment (transmitters) and the warmer as recommended below, according to the maximum output power of the communications equipment.

Rated maximum output power of transmitter W	**Separation distance according to frequency of transmitter m**		
	150 kHz to 80 MHz $d = \left[\frac{3}{3}\right]\sqrt{P}$	80 MHz to 800 MHz $d = \left[\frac{3}{3}\right]\sqrt{P}$	800 MHz to 2.5 GHz $d = \left[\frac{7}{3}\right]\sqrt{P}$
0.01	0.117	0.117	0.233
0.1	0.369	0.369	0.738
1	1.167	1.167	2.333
10	3.689	3.389	7.379
100	11.667	11.667	23.333

For transmitters rated at a maximum output power not listed above, the recommended separation distance d in meters (m) can be estimated using the equation applicable to the frequency of the transmitter, where P is the maximum output rating of the transmitter in watts (W) according to the transmitter manufacturer.

NOTE: At 80 MHz and 800 MHz, the separation distance for the higher frequency range applies. These guidelines may not apply in all situations. Electromagnetic propagation is affected by absorption and reflection from structures, objects and people.

Warranty

Introduction

Enthermics by Pedigo warrants to the original purchaser only, that any original part found to be defective in material or workmanship will, at our option, subject to provisions hereinafter stated, be replaced with a new or rebuilt part.

Warranty Period

The warranty period is as follows:

- For warming cabinets shipped to the United States or Canada,
  - The labor warranty remains in effect for one (1) year from installation or fifteen (15) months from the shipping date, whichever comes first. Pedigo will bear normal labor charges performed during the standard business hours, excluding overtime, holiday rates or any additional fees.
  - The original parts warranty remains in effect three (3) years from installation of appliance or thirty-nine (39) months from the shipping date, whichever comes first.
- For warming cabinets shipped outside of the United States or Canada,
  - The original parts warranty is one (1) year from the date of installation of appliance or fifteen (15) months from the shipping date, whichever comes first.
- To be valid, a warranty claim must be asserted during the applicable warranty period. This warranty is not transferable.

Exclusions

This warranty does not apply to:

- Calibration.
- Equipment damage caused by accident, shipping, improper installation or alteration.
- Equipment used under conditions of abuse, misuse, carelessness or abnormal conditions, including but not limited to, equipment subjected to harsh or inappropriate chemicals, including but not limited to, compounds containing chloride or quaternary salts, poor water quality, or equipment with missing or altered serial numbers.
- Any losses or damage resulting from malfunction, including the loss of contents or consequential or incidental damages of any kind.
- Equipment damage caused by use of any cleaning agents other than those recommended by Enthermics by Pedigo, including but not limited to damage due to chlorine or other harmful chemicals.
- Equipment modified in any manner from original model, substitution of parts other than factory authorized parts, unauthorized removal of any parts including legs, or unauthorized addition of any parts.

Continued on next page

Continued from previous page

- Collateral or incidental damage as a direct result of servicing equipment built into a wall structure is not covered under warranty. It is the responsibility of the owner to bear all expense related structural repairs including, but not limited to, external electrical connections and wiring, and the removal or replacement of caulk, grout, tile, or wall covering of any kind. A service access panel for built-in equipment installations is strongly recommended.

Conclusion

This warranty is exclusive and is in lieu of all other warranties, expressed or implied, including the implied warranties of merchantability and fitness for a particular purpose. In no event shall the Company be liable for loss of use, loss of revenue, or loss of contents or revenue, or for indirect or consequential damages. This warranty is in lieu of all other warranties expressed or implied and Enthermics by Pedigo neither assumes nor authorizes any persons to assume for it any other obligation or liability in connection with Enthermics by Pedigo equipment.

Pedigo Products, Inc.

An ISO 13485:2016 certified company

Printed in the U.S.A.

Specifications are subject to change without notice.

Made in the U.S.A