Premium VESA Rolling Cart

COMPULOCKS

SKU	Weight	Date	Version	Max Load	Max Screen
170B 170W	22lbs	28.05.25	REV C	10lbs	20”

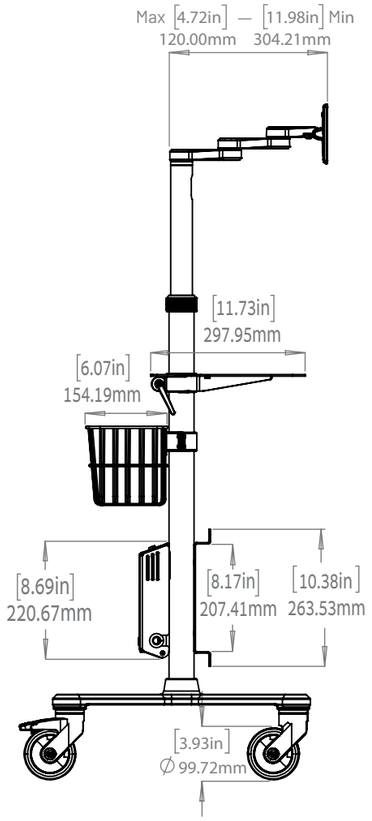

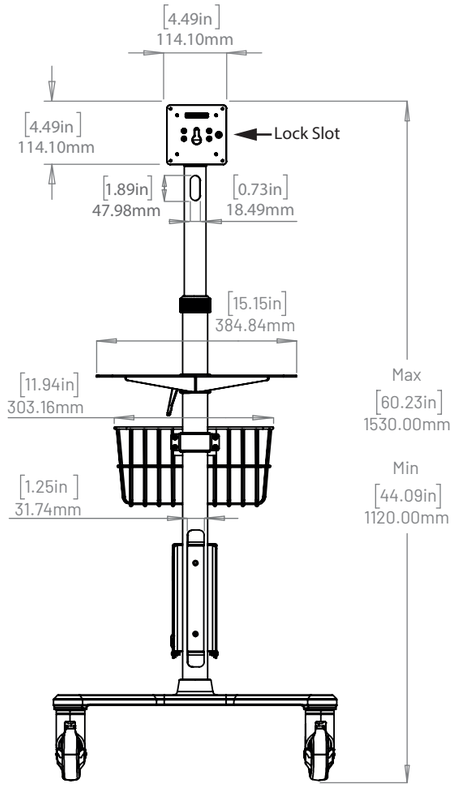

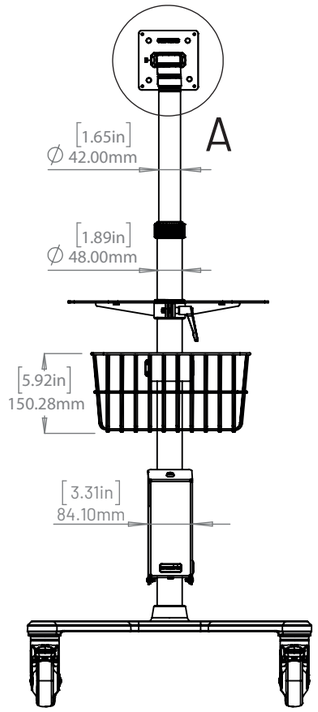

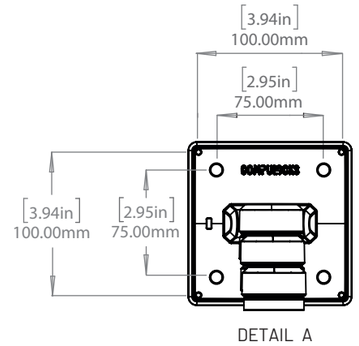

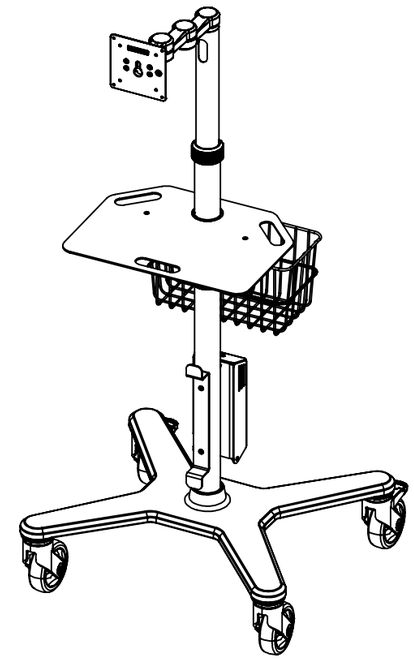

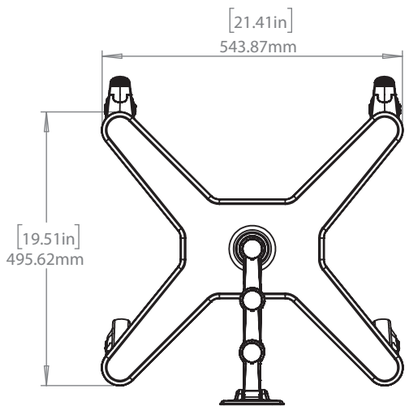

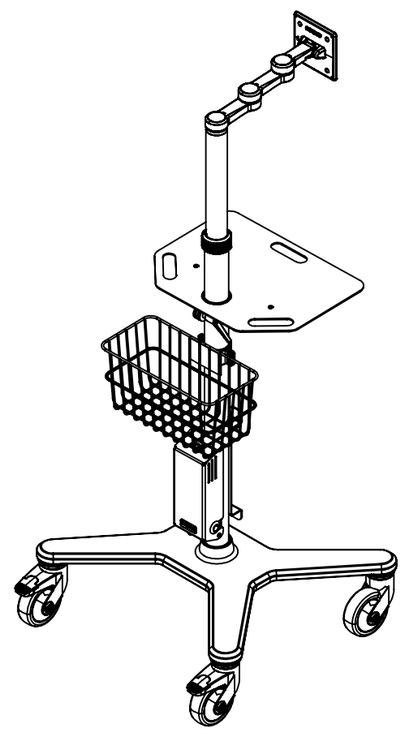

©Compulocks Brands Inc. All Rights Reserved.