SPEC SHEET

KoolMore 11 cu. ft. Medical Pharmacy Refrigerator With Multi-Level Emergency Alarms in White, UL Listed

Model: KM-PHR-11C

FEATURES

- Pharmacy Refrigerator
- Built-In 24-Hour Backup Battery for Alarm and Data Logging (12V)
- Adjustable Storage Shelves
- Digital Temperature Control
- Digital Humidity Display
- Electric-Heated Glass Door
- Automatic Defrost
- Refrigerant Type: R600a
- UL Certifications

CLOSE UP IMAGES

TECHNICAL SPECS

Dimensions

Length	23.8
Width	23.4
Height	75.6
Interior Depth	18.2
Interior Width	19.6
Interior Height	52.8
Depth Less Door	23.7
Depth With Door Open 90 Degrees	45.2
Power Cord Length	66.9
Weight (lbs)	159

Capacity

Net Cubic Feet	11
Individual Shelf Capacity	53 Lbs

Features & Materials

Defrost Type	AUTO
Refrigerant Type	R600a
Digital LED Display	Yes
Digital Humidity Display	Yes
Electrical Heating Door	Yes
Number of Doors	1
Door Style	GLASS□Electric heating door□
Number of Shelves	5
Shelves Adjustable	Yes
Shelf Material Type	Steel wire
Temperature Range	35.6-46.4
Ambient Temperature Range	50-89.6
Top Cooling Technology	Yes
Built-In Air Duct	Yes
Backup Battery Hours	24H
Backup Battery Type	LEAD-ACID
Backup Battery Replaceable	Yes
Backup Battery Rechargeable	Y TURN ON THE BATTERY SWITCH AND ACTIVATE THE BUIL
Backup Battery Voltage	12V
Backup Battery Capacity	1.4AH
Data Logging	Yes
USB Port	Yes
Safety Lock	Yes
Low Temp Alarm	Yes
High Temp Alarm	Yes
Ambient Temp Alarm	Yes
Power Failure Alarm	Yes
Sensor Failure Alarm	Yes
Door Ajar Alarm	Yes
Remote Alarm	NO/Yes Remote monitoring port RS48 & Modbus RTU
Sensor Count	6
Color Finish	white
Color Door Handles	Silver

Electric & Certifications

Amps	2.5
Plug Type	UL bent plug
Voltage	115
Wattage	190
Certifications	UL Listed

Plan View

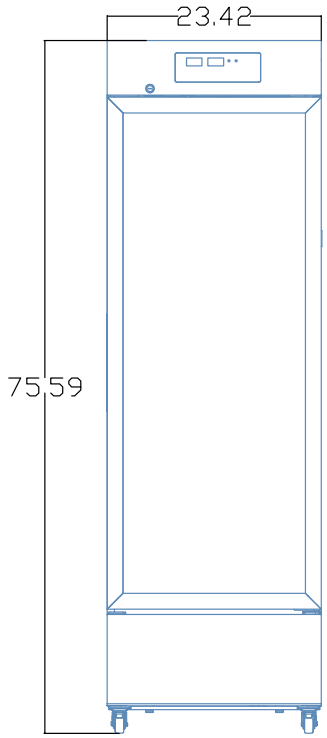

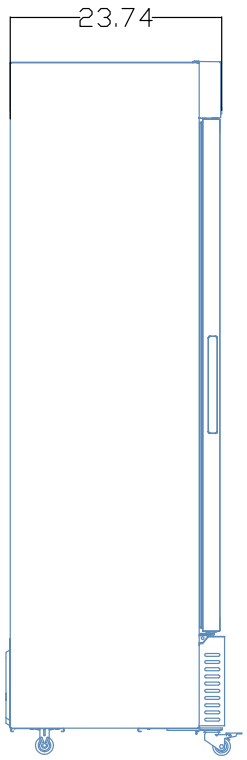

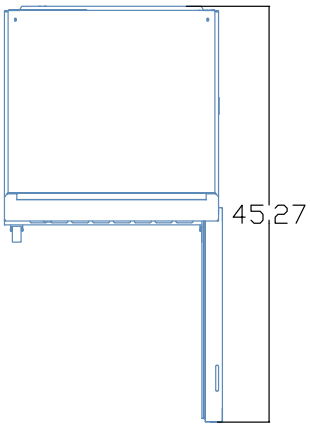

CERTIFICATIONS

UL

KoolMore