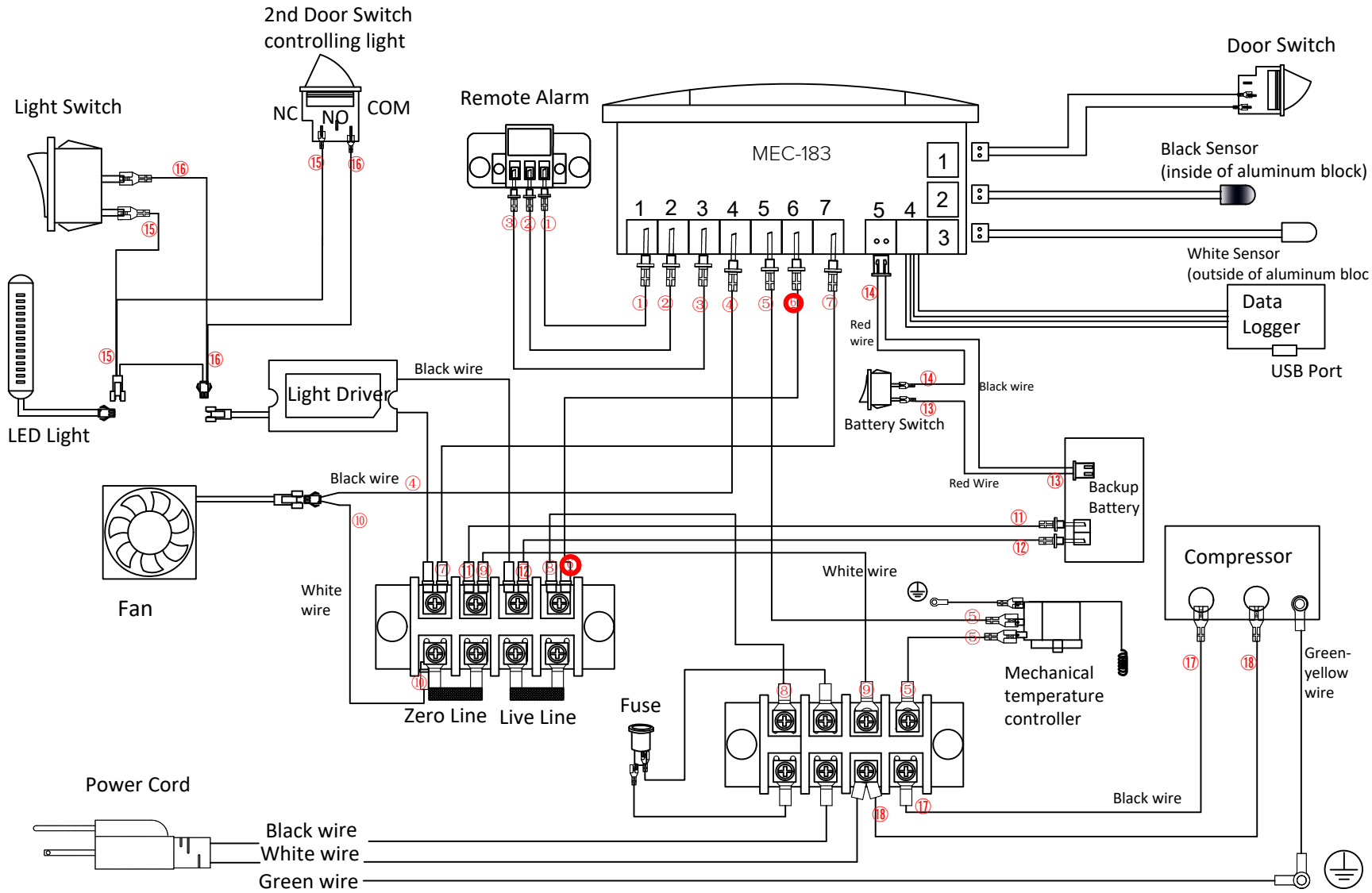

Controller wiring diagram MEC-183

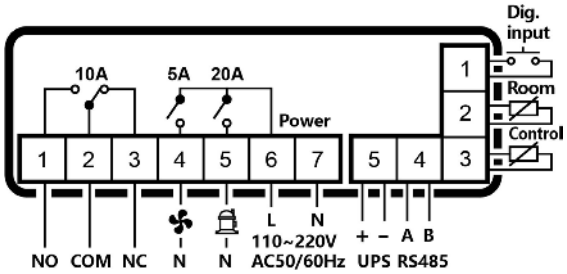

Title: Wiring diagram for PRE

ARCTIKO
true cooling specialists

Revision: 01

Drawing (initials): DS

Date: 20/06/2023

Approval:

Stefan Stucki (22. jun. 2023 09:42 GMT+2)

All rights to this drawing belong to Arctiko A/S.