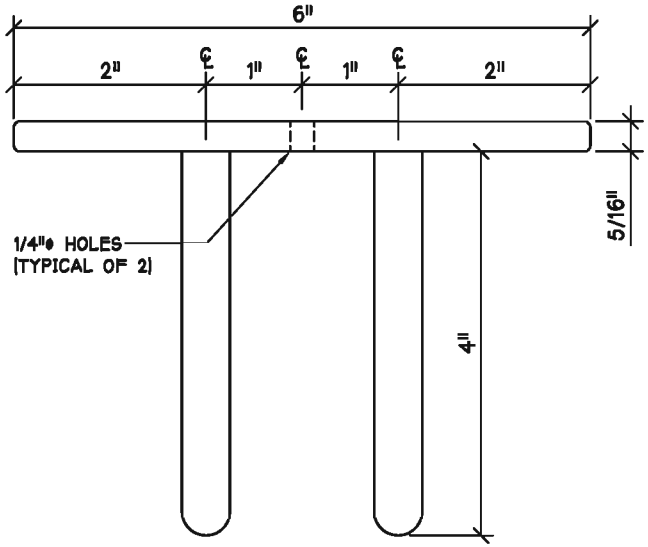

A 1 2-PEG APRON RACK PLAN VIEW

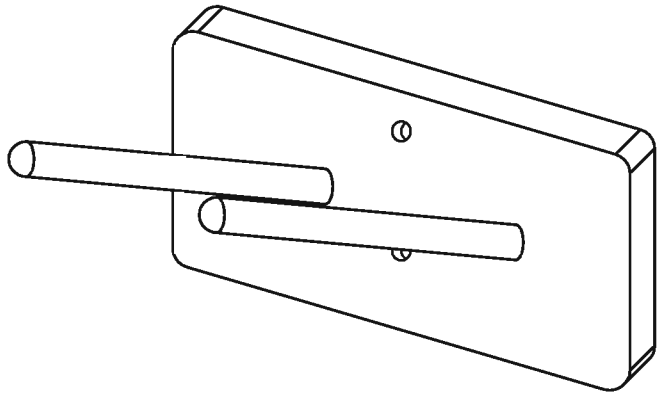

KEY PLAN

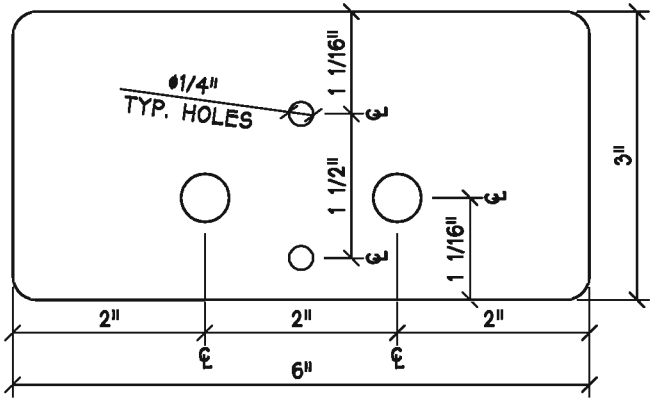

B 1 2-PEG APRON RACK FRONT VIEW

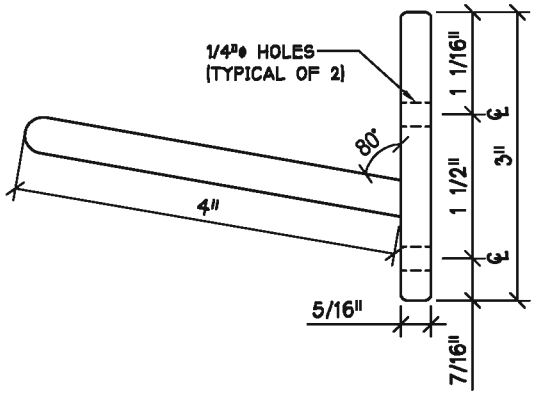

C 1 2-PEG APRON RACK SIDE VIEW

REV.	DATE	REVISION DESCRIPTION
1	8/1/13	ISSUED FOR REVIEW

NOTES:

ADDITIONAL EQUIPMENT:
(2) 2" SCREWS

MATERIAL:

COLOR:

WHITE

DRAWING NUMBER:

PART NUMBER:

DESCRIPTION:

TECHNICAL DRAWING FOR
2-PEG APRON RACK

All information contained on this document is the property of Phillips Safety Products Inc. This document shall not be altered used or disclose to a third party without the prior written consent of Phillips Safety Products Inc.

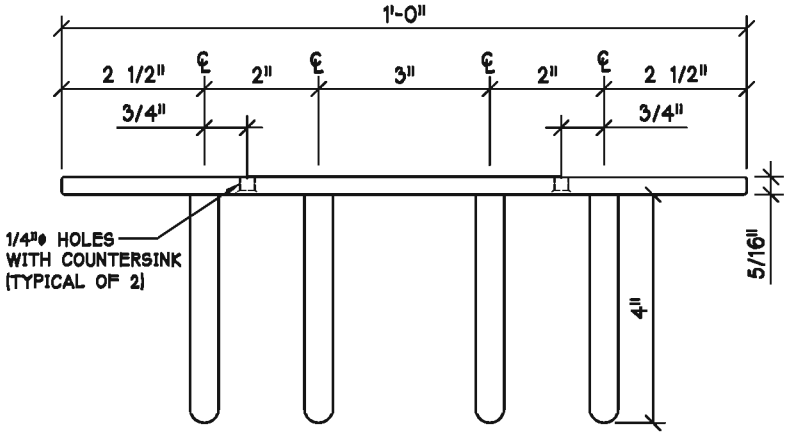

A 1 4-PEG APRON RACK PLAN VIEW

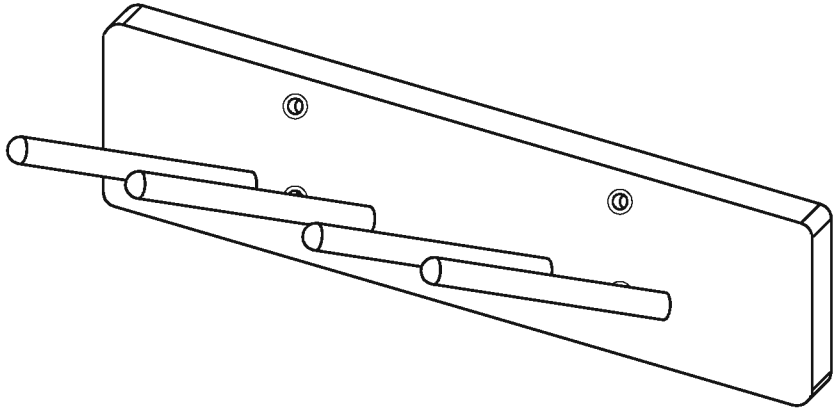

KEY PLAN

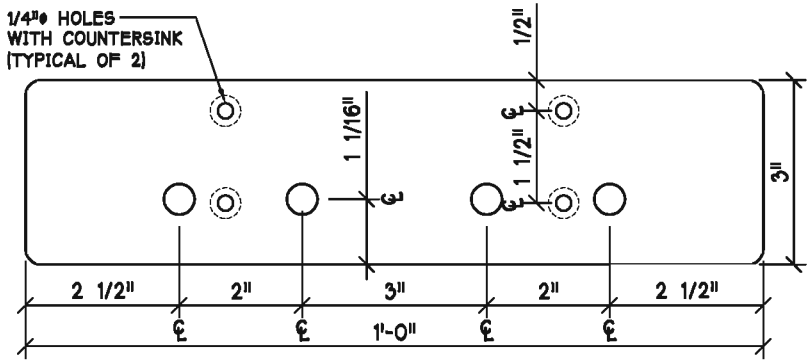

B 1 4-PEG APRON RACK FRONT VIEW

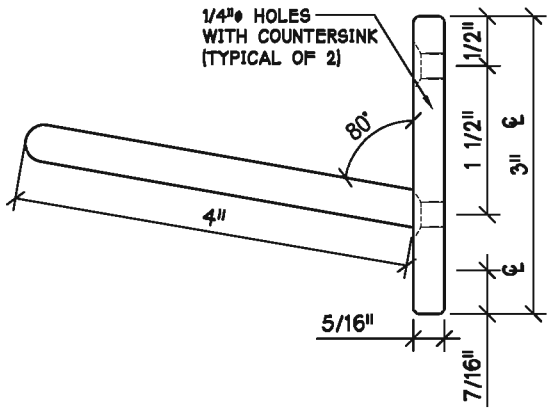

C 1 4-PEG APRON RACK SIDE VIEW

REV.	DATE	REVISION DESCRIPTION
1	8/1/13	ISSUED FOR REVIEW

NOTES:

ADDITIONAL EQUIPMENT:
(4) 2" SCREWS

MATERIAL:

COLOR:

WHITE

DRAWING NUMBER:

PART NUMBER:

DESCRIPTION:

TECHNICAL DRAWING FOR
4-PEG APRON RACK

All information contained on this document is the property of Phillips Safety Products Inc. This document shall not be altered used or disclose to a third party without the prior written consent of Phillips Safety Products Inc.

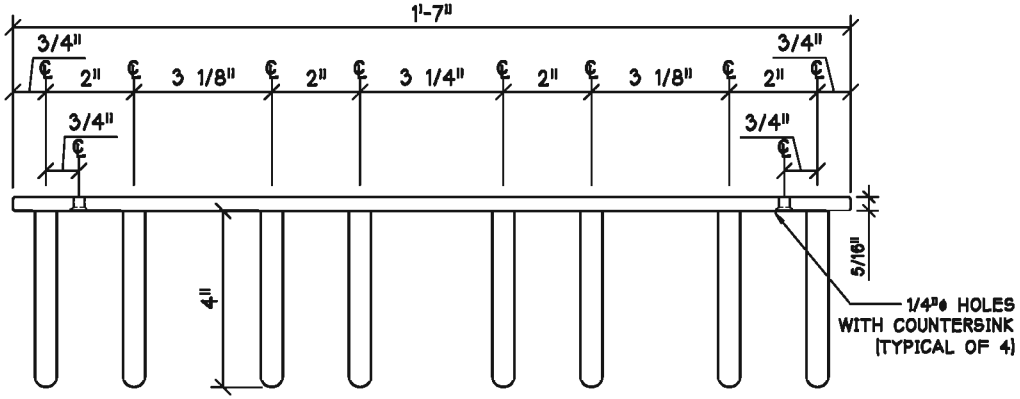

A 1 8-PEG APRON RACK PLAN VIEW

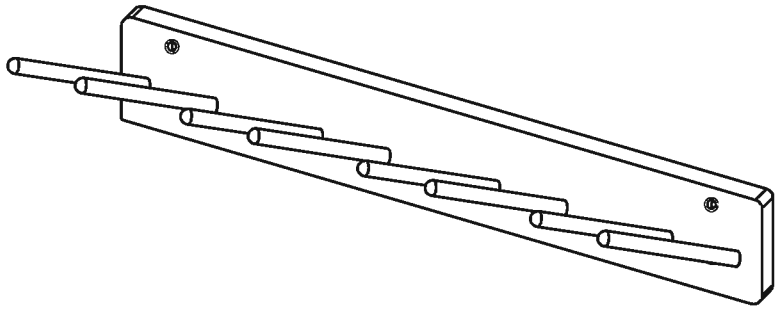

KEY PLAN

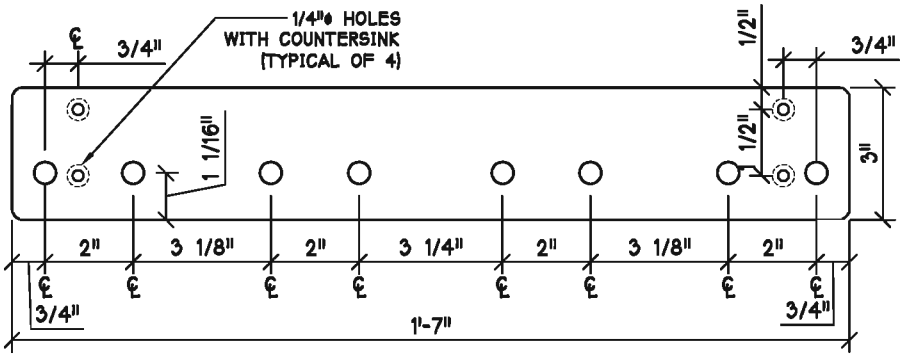

B 1 8-PEG APRON RACK FRONT VIEW

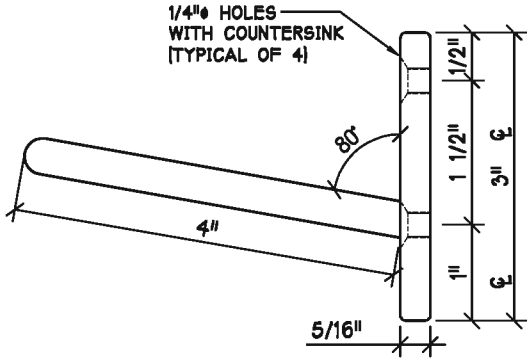

C 1 8-PEG APRON RACK SIDE VIEW

REV.	DATE	REVISION DESCRIPTION
1	8/1/13	ISSUED FOR REVIEW

NOTES:

ADDITIONAL EQUIPMENT:
(4) 2" SCREWS

MATERIAL:

COLOR:

WHITE

DRAWING NUMBER:

PART NUMBER:

DESCRIPTION:

TECHNICAL DRAWING FOR
8-PEG APRON RACK

All information contained on this document is the property of Phillips Safety Products Inc. This document shall not be altered used or disclose to a third party without the prior written consent of Phillips Safety Products Inc.

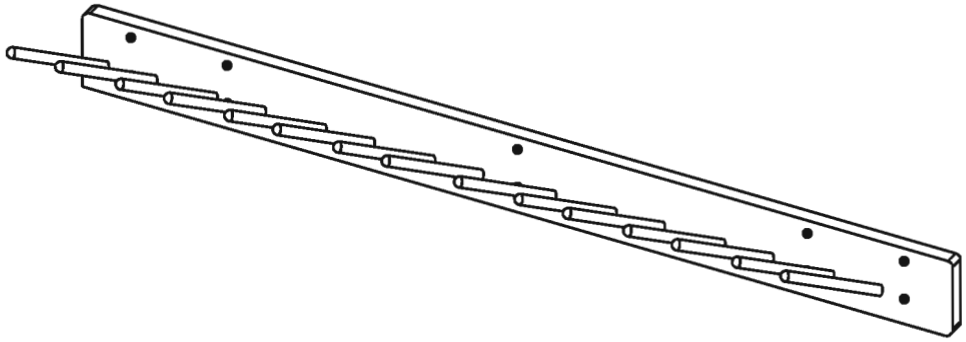

KEY PLAN

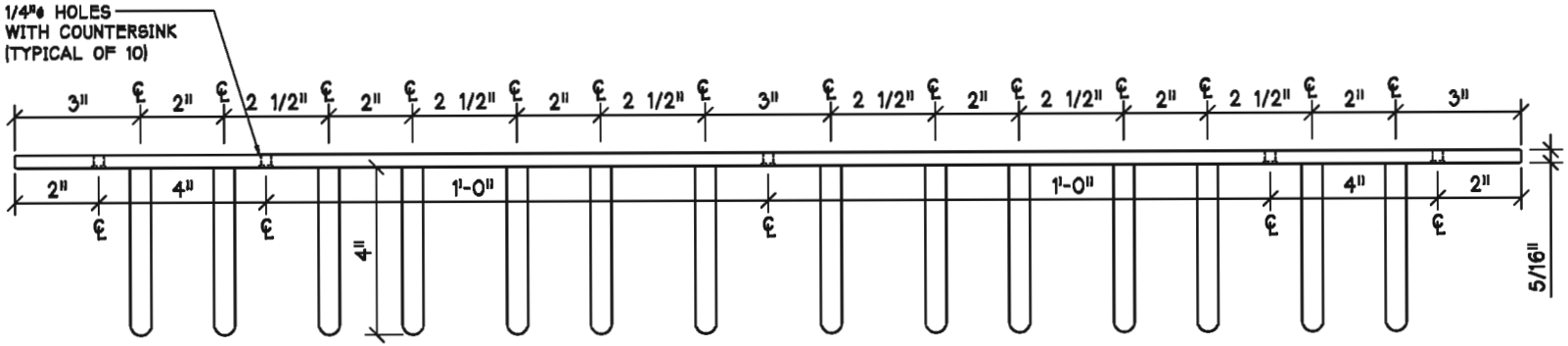

A/1 14-PEG APRON RACK PLAN VIEW

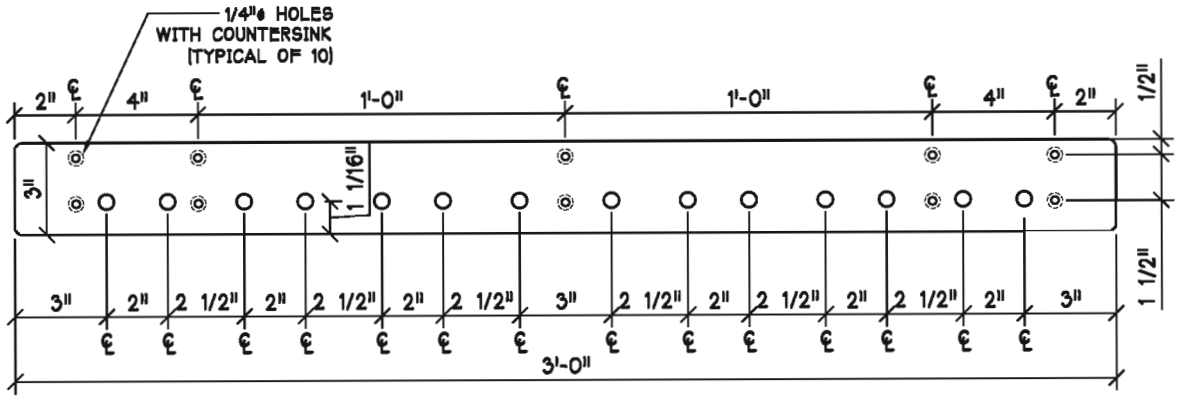

B/1 14-PEG APRON RACK FRONT VIEW

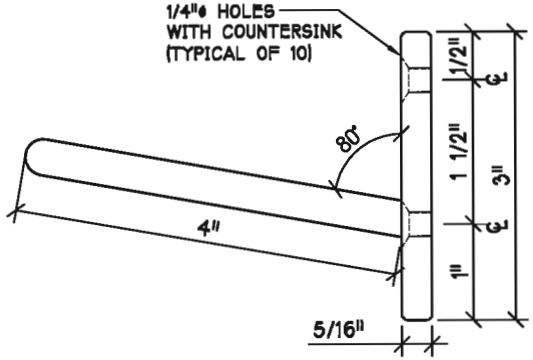

C/1 14-PEG APRON RACK SIDE VIEW

REV.	DATE	REVISION DESCRIPTION
1	8/1/13	ISSUED FOR REVIEW

NOTES:

ADDITIONAL EQUIPMENT:
(10) 2" SCREWS

MATERIAL:

COLOR:

WHITE

SYSTEM NUMBER:

PART NUMBER:

DESCRIPTION:

TECHNICAL DRAWING FOR
14-PEG APRON RACK

All information contained on this document is the property of Phillips Safety Products Inc. This document shall not be altered used or disclose to a third party without the prior written consent of Phillips Safety Products Inc.

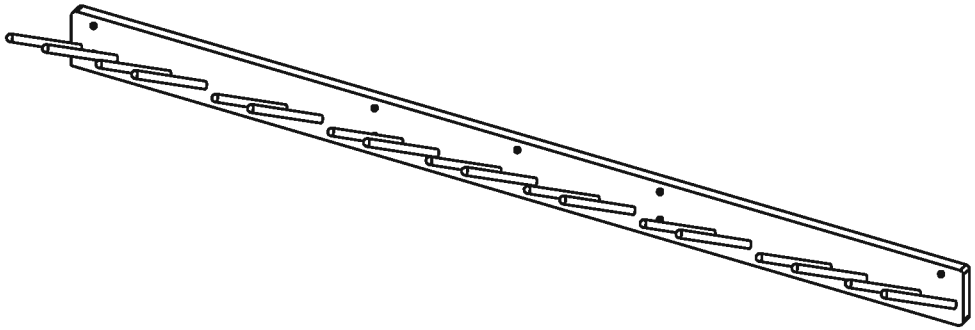

KEY PLAN

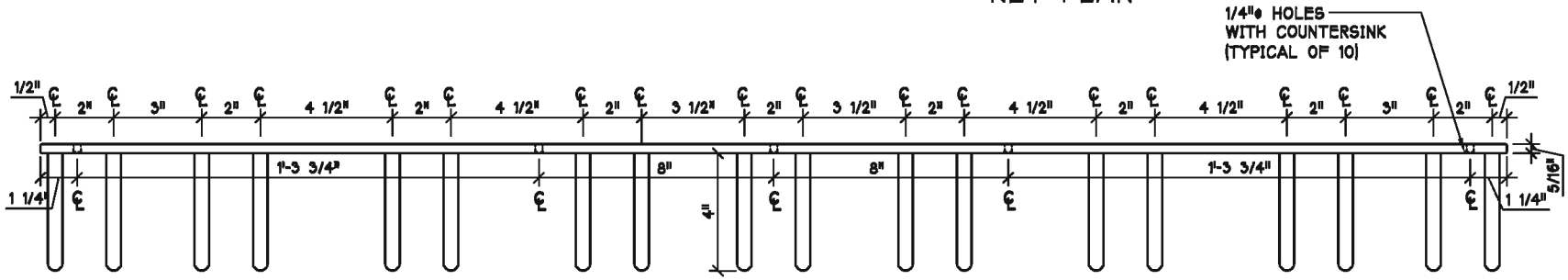

A 1 18-PEG APRON RACK PLAN VIEW

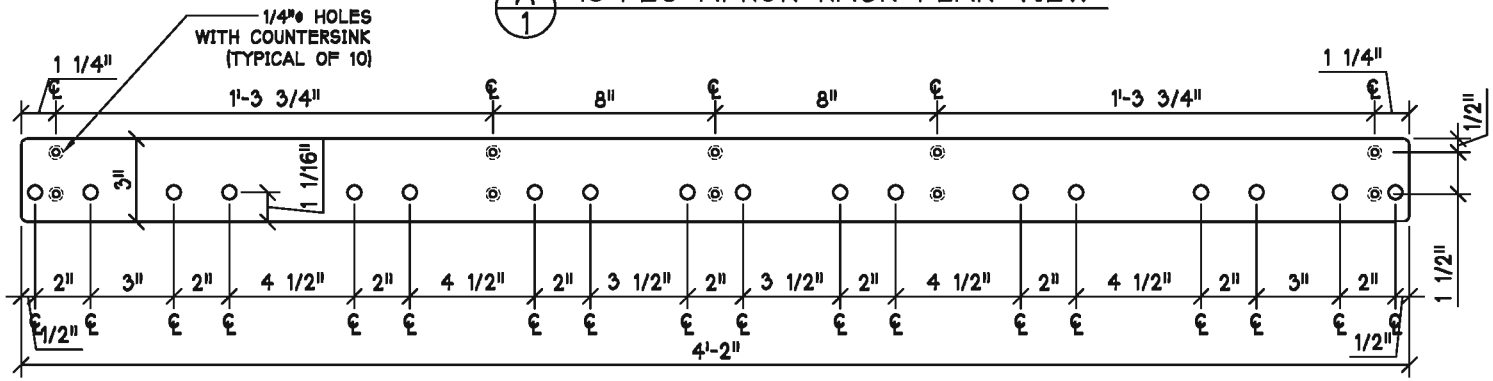

B 1 18-PEG APRON RACK FRONT VIEW

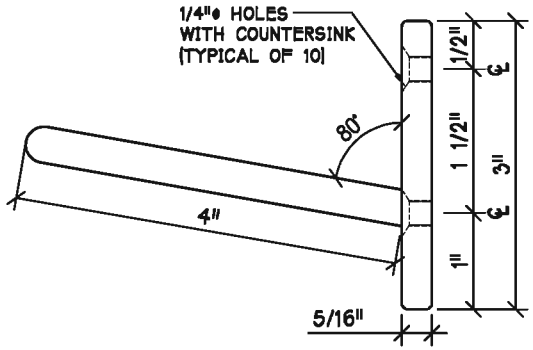

C 1 18-PEG APRON RACK SIDE VIEW

REV.	DATE	REVISION DESCRIPTION
1	8/1/13	ISSUED FOR REVIEW

NOTES:

ADDITIONAL EQUIPMENT:
(10) 2" SCREWS

MATERIAL:

COLOR:

WHITE

DRAWING NUMBER:

PART NUMBER:

DESCRIPTION:

TECHNICAL DRAWING FOR
18-PEG APRON RACK

All information contained on this document is the property of Phillips Safety Products Inc. This document shall not be altered used or disclose to a third party without the prior written consent of Phillips Safety Products Inc.